FOOD PUMPS AND SYSTEMS CATALOGUE

www.pcm.eu

PCM | keep it moving

FLUID HANDLING EXPERT IN THE FOOD INDUSTRY

PCM is a leading manufacturer of pumping, dosing, mixing and filling systems for the food industry.

END-TO-END PRODUCT INTEGRITY

Today's high quality foodstuffs are made with highly expensive ingredients. And the market trend is towards more recognisable processed foods with whole vegetables and fruits. Our systems enable you to handle - transfer, dose, mix and fill - challenging ingredients with minimal damage.

LOW LIFE CYCLE COSTS

A pump that is not well adapted to its operational parameters can cost you money in terms of production, maintenance downtime and energy consumption. We use Life Cycle Costs (LCC) analysis to find the most cost-effective pumping solutions for your industrial processes.

PERFORMANCE YOU CAN COUNT ON

Reliability and productivity are your best allies in facing the non-stop nature of today's just-in-time retail supply chain. PCM pumping, dosing, mixing and filling systems enable you to produce the same recipe identically from the start of your production run until the finish and ensure repeatability.

MEETING THE STRICTEST STANDARDS

We share your commitment to ensuring customer safety. To begin with, all our systems are CIP (Cleanable In Place). In addition, we continually invest in innovations that enable you to anticipate constantly evolving food safety regulations. Finally, our vast international experience enables us to design systems that meet both local regulations and international standards.

OUR MARKETS

1930
René Moineau invents the Progressing Cavity Pump (PCP).

1932
René Moineau, in partnership with Robert Bienaimé, founded PCM Pompes

1970
PCM invests beyond the Progressing Cavity Pump and adds Delasco™ and Precipompes™ to its product range.

1990
PCM acquires Dosys™ technology.

2009
PCM introduces the PCM Dosymix™ dynamic mixer, 3A certified.

2012
PCM launches two new products in the food market: the EcoMoineau™ C PCP and the HyCare™ hygienic PCP.

2015
Dosys™ pump (DACC) acquires 3A certification.

FOOD CONTACT AND HYGIENIC DESIGN

It is important to understand the difference between these two concepts, both of which are involved in controlling food safety.

FOOD CONTACT

These symbols for the European Union and FDA for United States ensure **compliant materials** are safe according to regulatory requirements.

These requirements show that, under normal and foreseeable conditions of use, these materials do not transfer their constituents to food in a quantity likely:

- to present a danger to human health,
- to cause an unacceptable change in food,
- to cause a deterioration in the organoleptic characteristics.

HYGIENIC DESIGN

certifications for the European Union and 3A for the United States define criteria for **hygienic design and cleanability** for equipment production.

Their recommendations are intended to remove all retention areas likely to promote bacterial or microbial growth and may include:

- geometry of equipment
- surface roughness
- manufacturing methods (welding...).

Both organisations share a common goal: that of a non-contamination of process and food safety.

CFD TO PROMOTE HYGIENE

The use of CFD (Computational Fluid Dynamics) nowadays is a very powerful and robust tool to model phenomena related to fluids.

Numerical simulations, carried out in the PCM R&D department, allow computing the flow field through the volumetric pumps manufactured by PCM. These calculations have allowed PCM to optimise the internal design of pumps and **improve the cleaning in place effect**. This result was obtained by increasing the speed of the cleaning fluid and by studying the turbulences in the most difficult areas to clean.

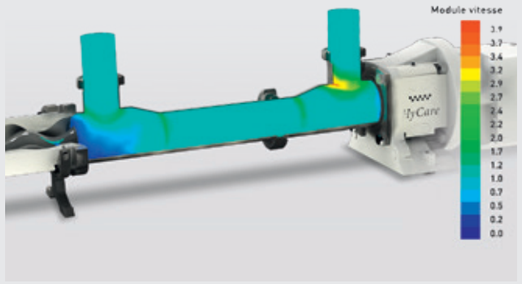

Cleaning-in-place (CIP) fluid speeds modelling in the body of the HyCare™ pump using CFD.

TABLE OF CONTENTS

PCM SOLUTIONS 6

PCM APPLICATIONS 8
- Transfer 8
- Dosing 10
- Mixing 12
- Filling / Injection / Topping 14

PCM TECHNOLOGIES 16

PCM Moineau™ progressing cavity pumps 18
- HyCare™ 20
- EcoMoineau™ C 24
- Viscofeeder 28
- IVA/LVA/GVA/GBB 32

PCM Delasco™ peristaltic pumps 36
- DL Series 38

PCM Lagoa dosing pumps 42
- Lagoa 44

PCM mixers 48
- Dosymix™ 50
- Dostam 54

PCM Dosys™ dosing pumps 58
- Dosyfruit™ 62
- Hopper station 67
- Additive station 68
- Dosing unit 69
- Flavor filling station 70
- Pouch filling station 72
- Multi-injection station 73

PCM SERVICES 74

PCM SYSTEMS

preserve the product at every step of the process

2 Dosing

Never waste a drop

Dosing of valuable ingredients requires accuracy and flexibility.

3 Mixing

Mix with care

We make the impossible possible: mixing ingredients without altering the texture.

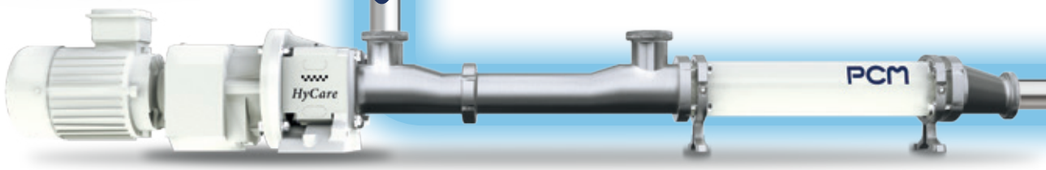

HyCare™

1 Transfer

Protect valuable ingredients

Although product integrity is a concern at every step of food processing, the risk of damage is highest during the transfer stage.

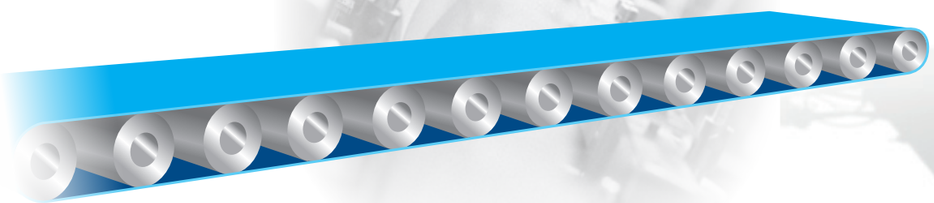

4 Filling-Injection-Topping

Freedom to be creative

Breathe new life into your existing products and production facilities.

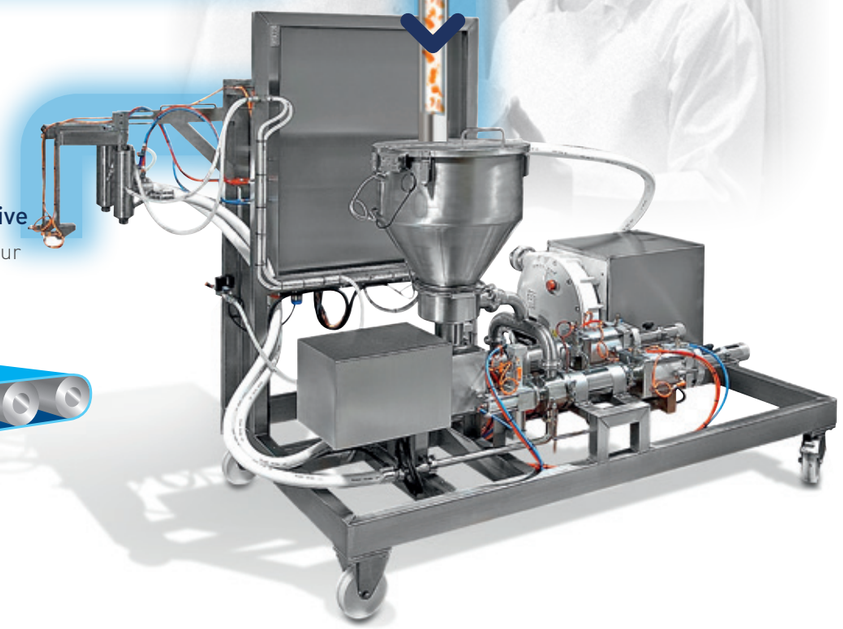

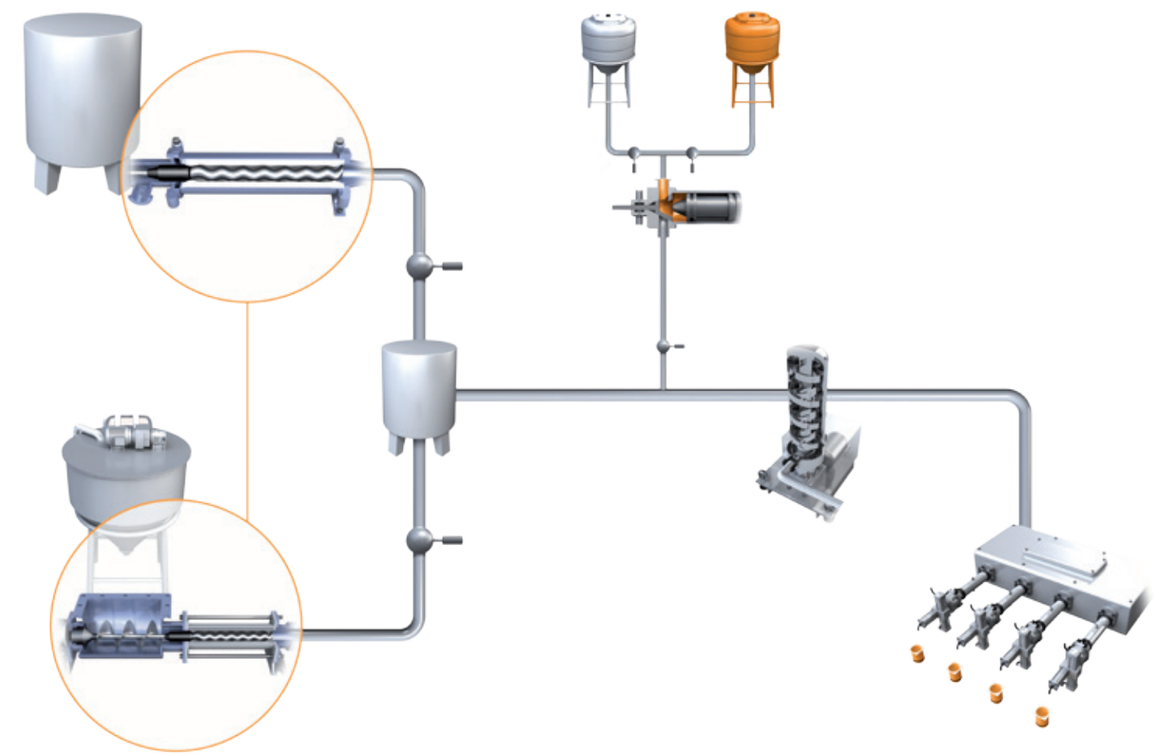

TRANSFER

Protect valuable ingredients: no ingredient is too complex

PCM transfer solutions are the ideal choice for pumping a wide range of ingredients from thin liquid to highly viscous pastes and sauces, at cold and hot temperature. These ingredients can be sticky, slippery or contain solids (including large chunks and soft pieces such as chopped vegetables and whole fruits).

PCM transfer pumps and systems are also recommended for applications that require pressure variations, depression and viscosity variations.

The choice of the technology will depend on the application and its requirements.

PCM MOINEAU™ PROGRESSING CAVITY PUMPS

Respect the texture of fragile fluids

When you handle fragile products, the risk to the quality and texture of ingredients is highest during this transfer stage and depends partly on the pump technology used.
With positive displacement pumps, PCM is committed to handle your ingredients with the highest level of care, ensuring the integrity and the texture of your products ***(further information about Moineau technology, see p.19).***

The PCM Moineau™ progressing cavity pump preserves the product integrity thanks to a controlled and minimum slip rate.

PCM DELASCO™ PERISTALTIC PUMPS

Handle abrasive and corrosive fluids

With only one item in contact with the pumped product and low operating speed, peristaltic pumps are ideal to transfer very abrasive and/or corrosive fluids (musts, ground meat juices with bone fragments...). They are also able to transfer soft or solid pieces without any damage (e.g. peach transfer).
Furthermore, they can easily integrate specific industrial processes as occasional dry running is possible without damage occuring.

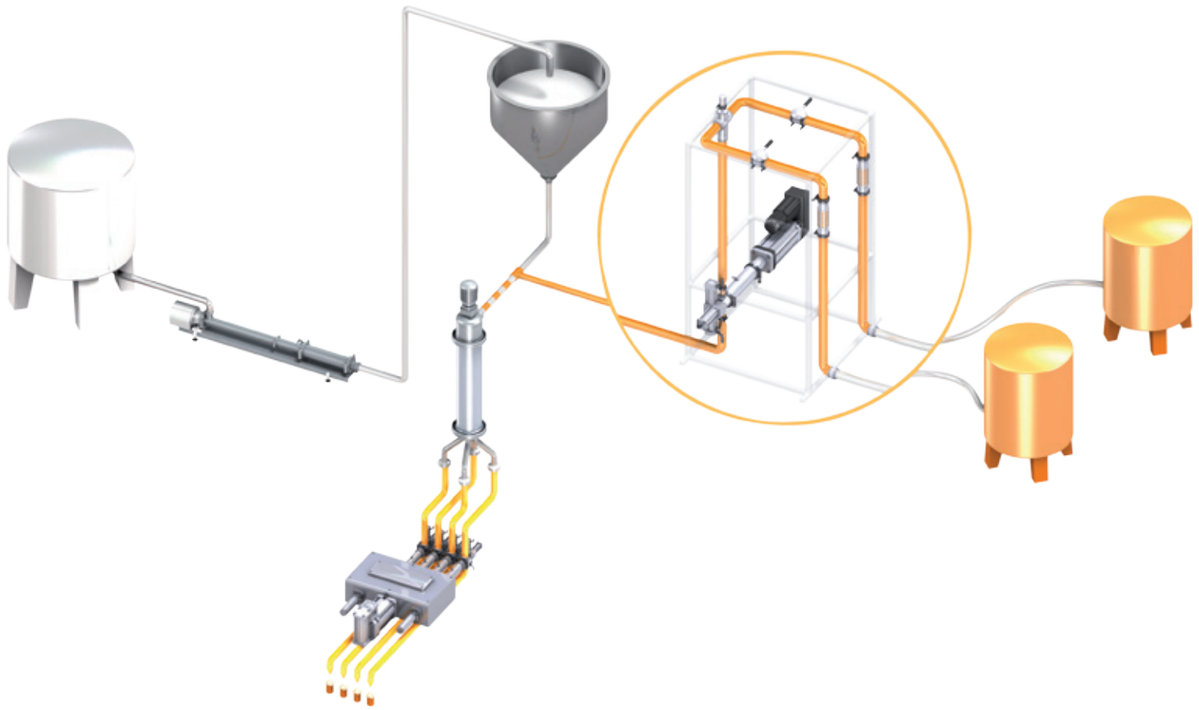

DOSING

Never waste a drop: the perfect dose of accuracy and flexibility

Inaccuracies and flexibility deficiencies of dosing systems are the main causes linked to high operating costs for most of food production systems.

The PCM dosing systems are designed to meet the requirements associated to each metered product, the required accuracy and the implemented operating processes. Each technology that is used provides the best of its advantages regarding accuracy, product losses, texture respect, productivity and cleaning ease.

PCM DOSYS™ PISTON DOSING PUMPS

These pumps enable accurate dosing, closest to the containers, of non homogeneous ingredients that may contain large pieces with minimum losses and a maximum repeatability.

PCM MOINEAU™ PROGRESSING CAVITY PUMPS

They allow the continuous dosing of fragile ingredients for applications that may require high flowrates.

PCM DELASCO™ PERISTALTIC PUMPS

PCM Delasco™ peristaltic pumps are ideal for the dosing of highly abrasive and aggressive fluids.

PCM LAGOA™ DIAPHRAGM DOSING PUMPS

These diaphragm dosing pumps allow metering small doses of low viscosity/corrosive products.

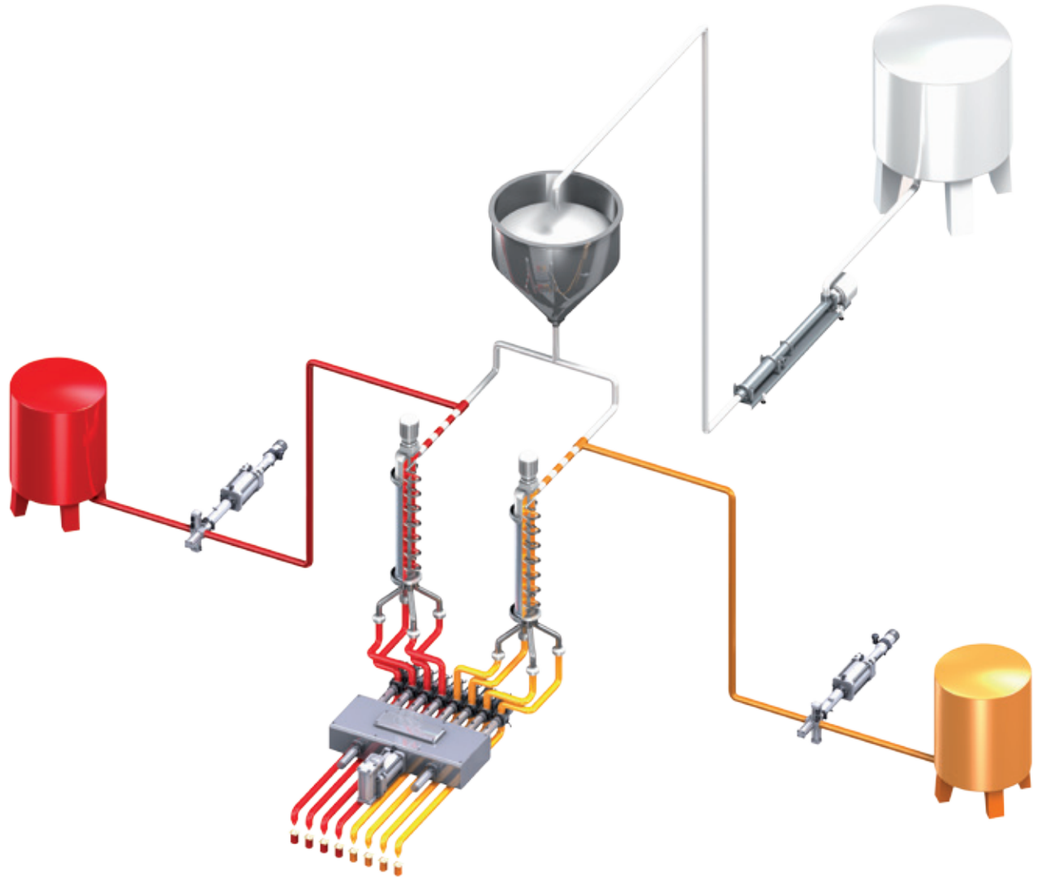

MIXING

Mix with care: introducing a better way to mix

PCM gives the opportunity to customers to optimise the overall operating cost through an inline process rather than expensive and space consuming batch solutions.

LESS LOSS AND MORE FLEXIBILITY

When your production requires rapid ingredients change, a PCM inline mixer is the answer. You can switch ingredients in mid-production without having to empty the batch tank first. Our inline mixers can also be fitted with multiple outlets for extremely even distribution through multiple filling nozzles.

INLINE MIXING : AN OPPORTUNITY FOR MORE INNOVATIONS

This flexibility and the possibility to change rapidly the recipes offers you the opportunity to create new products. New recipies with bigger solids, innovative textures and accurately distributed mixed products can now be easily incorporated.

COST-EFFICIENT CLEANING

With a PCM inline mixer there is no tank to scrape at the end of a production run, unlike with batch mixing. And the mixer's small internal volume makes it easy to clean with minimal quantities of hot water and chemicals, using your standard CIP/SIP processes.

OPTIMISED INSTALLATION

This system is less expensive to install as it only requires the installation of a single tank containing the main ingredient. It allows also a considerable space saving on the production line.

PCM DOSYMIX™ INLINE DYNAMIC MIXER

A dynamic mixer will be the ideal choice for mixing heterogeneous or homogeneous, viscous, shear sensitive products with or without pieces.

The rotation of the screw allows easy and efficient cleaning in place.

PCM DOSTAM INLINE STATIC MIXER

A static mixer will be recommended for mixing homogeneous liquids without solids.

Our systems guarantee homogeneous mixing without altering the ingredients or the product texture. This eliminates use of costly additives to recover the texture at the end of operation line.

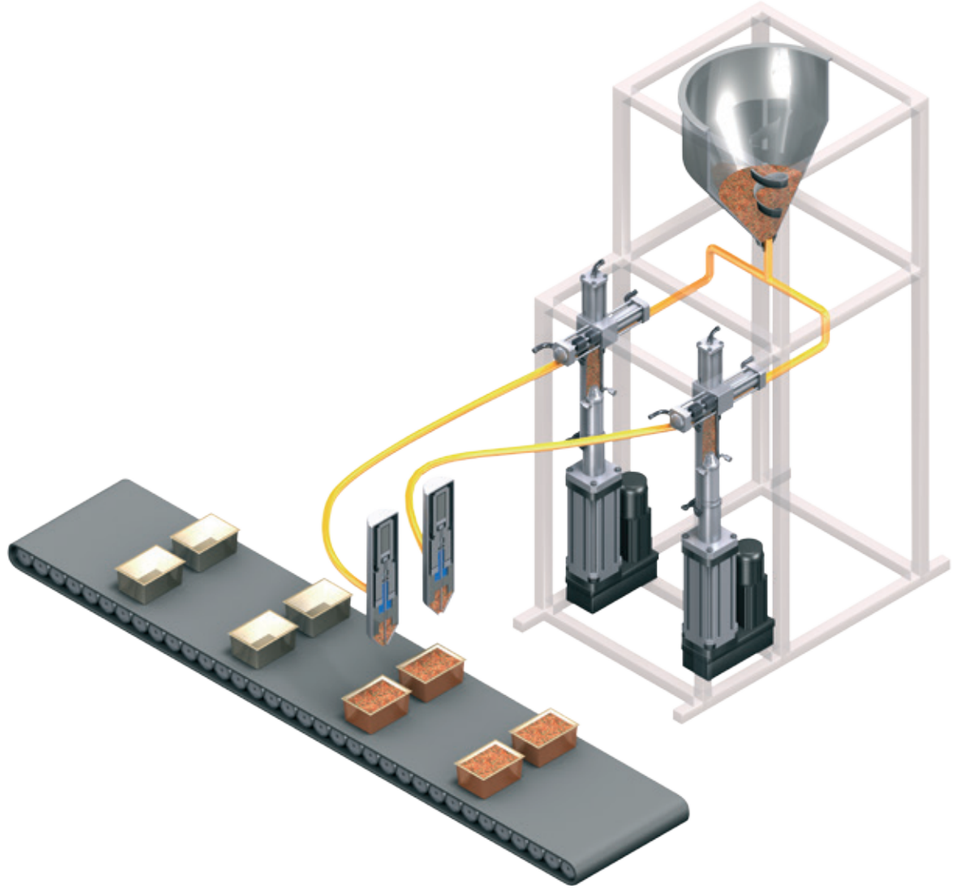

FILLING

Freedom to be creative: put ideas into production through versatility and maintening the integrity of the ingredients.

The creation of innovative food products relies on an efficient filling solution that is able to meet the complexity of mixing, recipes and conditioning techniques. Nowadays, the creativity regarding containers and the diversity of textures seems limitless. PCM filling systems are designed to provide versatility and accuracy required for these operations, which can be very critical.

VERSATILITY

Every PCM filling system is designed to provide maximum volumetric flexibility. In other words, not only can you fill containers of all shapes and sizes, you can also vary the filling volume from one cycle to the next. Versatility extends to its compatibility with a multitude of filling ingredients, from liquid flavorings to viscous jams, from sticky toffee to semi-solid sauces.

PRECISION AND RESPECT OF INGREDIENTS

Based on Dosys™ dosing pumps, PCM filling systems benefit from the two main advantages of this technology: accuracy of the dosing (+/- 0.5%) and the respect of ingredients, even with fluids containing large pieces (up to 48 mm).

PCM DOSYS™ FILLING, INJECTION, TOPPING SYSTEMS

Simplified integration

Our filling systems fit perfectly to your process without affecting your existing equipment. Our portable systems provide great flexibility as you can easily integrate them in your production line.

Respect of ingredients

PCM filling systems can be fitted with a wide range of nozzles compatible with different levels of viscosity, solid or stickiness.

WHOLE WAY	UMBRELLA	SUCKBACK	SUCKBACK CARAMEL	DIAPHRAGM	MULTI-OUTLET DIAPHRAGM
			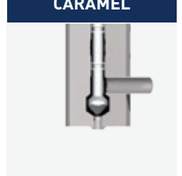		
Viscous, semi-solid ingredients	Rice, jam and chopped potatoes	Drippy sauces	Stringy ingredients	For liquid or low-viscosity ingredients (no solids)	

PCM TECHNOLOGIES

PCM MOINEAU™ PROGRESSING CAVITY PUMPS

From the name of the inventor and PCM co-founder: René Moineau

Principle

A Moineau™ pump consists of a helical rotor turning in a helical stator. When the rotor turns inside the stator, the honeycomb progresses spirally along the axis of the pump without changing either shape or volume. This action transfers the product from the pump suction to the pump discharge without degrading the product.

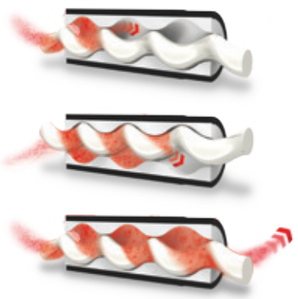

Range of PCM Moineau™ progressing cavity pumps

- HyCare™
- EcoMoineau™ C
- Viscofeeder
- IVA/LVA/GVA/GBB

PCM DOSYS™ DOSING, FILLING AND INJECTION PUMPS

The keys to perfect dosing and filling

Principle

The Dosys™ pump automatically synchronises dosing volumes with the filling station for optimal performance. It also meters the ingredients with precision, thanks to the servo-driven piston and a patented flow-control valve. Dosys™ pumps are designed to handle liquids, semi-solids and viscous products without degrading their texture.

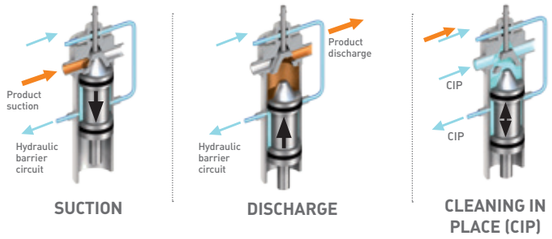

Range of PCM Dosys™ dosing, filling and injection systems

- Dosyfruit™
- Dosing unit
- Hopper station
- Additive station
- Flavor filling station
- Pouch filling station
- Multi-injection station

PCM DELASCO™ PERISTALTIC PUMPS

The ideal choice to reduce maintenance costs

Principle

The peristaltic pumping principle is based on the capacity of a soft elastomer hose to accept a deformation and subsequently recover its initial shape. Peristaltic pumps are provided with either high or low pressure hoses, covering a wide range of applications which need versatility and flexibility.

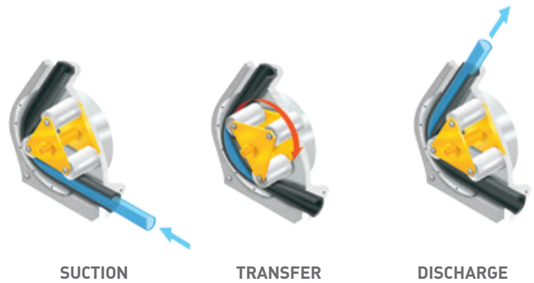

Range of peristaltic pumps PCM Delasco™

- DL Series

PCM LAGOA DIAPHRAGM DOSING PUMPS

Accuracy and reliability: ingredients of a successful dosing

Principle

The Lagoa pump is composed of a diaphragm connected to a piston which alternating movement successively fills and empties the pumphead.

1- The backward movement of the diaphragm opens the bottom check valve and allows the entry of fluid, which fills the pumphead.

2- The forward movement of the diaphragm closes the bottom check valve, opens the top check valve and expels the dose.

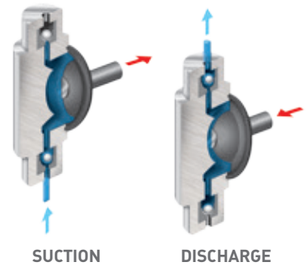

Range of PCM Lagoa diaphragm dosing pumps

- Lagoa

PCM MOINEAU™ PROGRESSING CAVITY PUMPS

From the name of the inventor and PCM co-founder: René Moineau

PRINCIPLE OF MOINEAU™ TECHNOLOGY

A Moineau™ pump consists of a helical rotor turning into a helical stator. When the rotor turns inside the stator, the honeycomb progresses spirally along the axis of the pump without changing either shape or volume. This action transfers the product from the pump suction to the pump discharge without degrading the product.

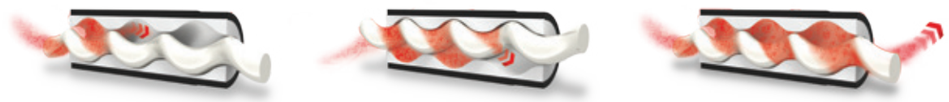

BENEFITS

- Preserves the texture of fragile fluids (no shearing compared with lobe or ECP technologies)
- Handles fluids with solids
- High suction capability
- Self-priming
- Constant non-pulsating flow
- Reversible

RANGE OF PCM PROGRESSING CAVITY PUMPS

- HyCare™
- EcoMoineau™ C
- Viscofeeder
- IVA/LVA/GVA/GBB

HYCARE™

The most hygienic progressing cavity pump on the market

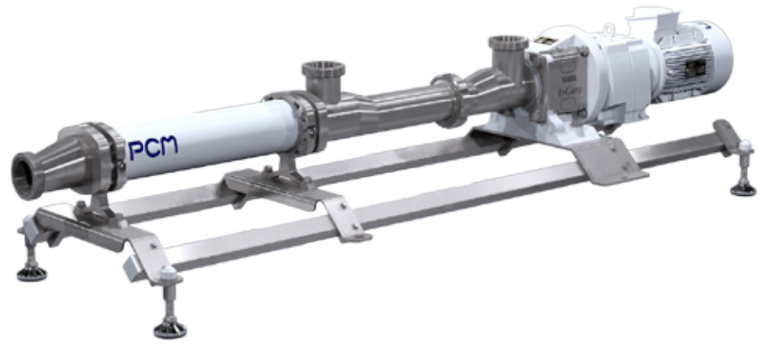

The HyCare™ pump has been designed to meet the strictest food hygiene standards.

The HyCare™ pump complies with the **FDA** (USA) and **CE 1935/2004** (Europe) requirements which guarantee materials compatibility with food products and equipment traceability.

EHEDG (Europe) or **3A** (USA) certified, this pump has become the **reference for the food industry**.

HyCare™ pump technology offers **unbeatable hygiene and food safety.**

TECHNICAL PERFORMANCES

- **Pressure :** 16 bars
- **Flowrate :** 50 m³/h
- **Particles size :** 32 mm

RANGE

- 22 models

EXAMPLES OF APPLICATIONS

Designed for microbiologically sensitive food applications:

- Dairy products
- Meat
- Liquid eggs ...

HYCARE™ PUMP CONSTRUCTION AND BENEFITS

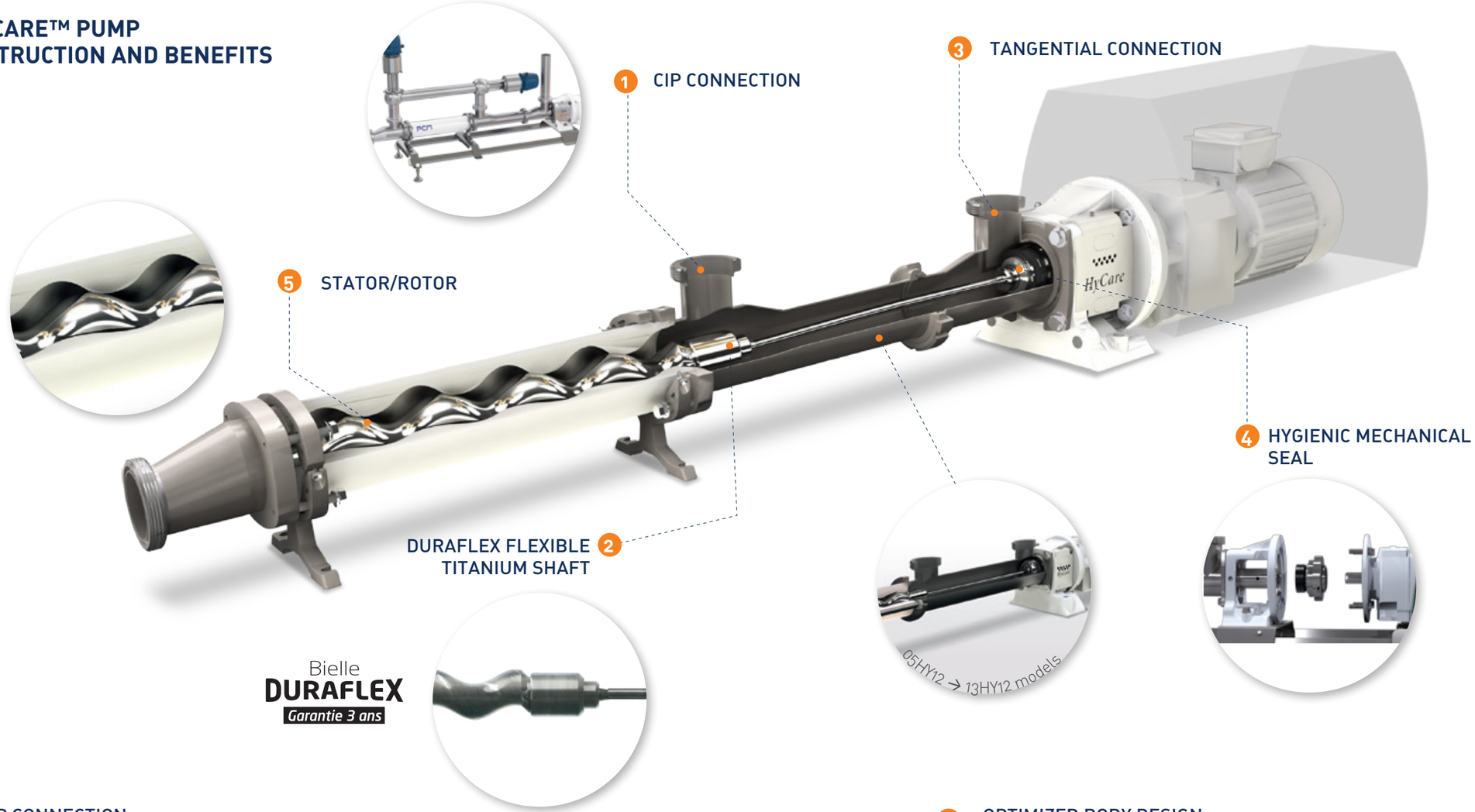

AVAILABLE CONNECTIONS

- SMS
- Clamp (3-A)
- DIN 11851
- Din 11864-1 (3A and EHEDG)

The pump can be provided **with or without** vertical CIP connection.

3 AVAILABLE POSITIONING FOR SUCTION CONNECTIONS

- Upward tangential
- Right tangential*
- Left tangential*

* looking from outlet side towards the drive

1 CIP CONNECTION
- Designed to be cleaned in place

2 DURAFLEX FLEXIBLE SHAFT
In titanium:
- Quality and reliability
- 3 years guarantee
- The shaft flexibility allows a small footprint

One-piece design :
- Any possible retention area unlike the classic open joints

- The total absence of wear parts prevents any risk of metal particles being released into the product

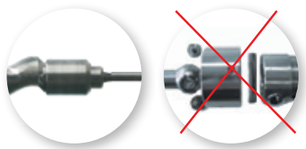

* The warranty is 3 years under normal conditions of use: within the limit of 10 000 operating hours, at a speed between 80 and 280 rpm, in compliance with the PCM CIP guidelines.

3 OPTIMIZED BODY DESIGN
- The shape and the tangential connection improve cleaning efficiency (internal flow speed)

Upward tangential
Single flow: more efficient

Upward
Divided flow: less effective

4 HYGIENIC MECHANICAL SEAL
- Its position near the CIP inlet allows optimum cleaning
- Its internal design is free of screws or springs (any retention area)
- Easy and quick maintenance without disconnecting the pipes

5 MOINEAU™ TECHNOLOGY respects the texture of your pumped products *(learn more p.19)*

6 STATOR ANTI-ROTATION SYSTEM
- Ensures a secured position even in case of high pressure or high temperature

7 BASEFRAME WITH ADJUSTABLE FEET
- From 20mm to 50mm according to models

ECOMOINEAU™ C

The shortest progressing cavity pump in the market

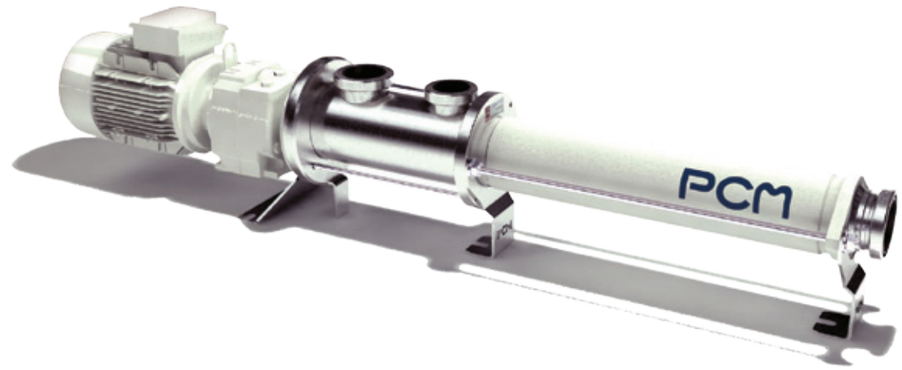

Its revolutionary design combines the legendary performance and reliability of **PCM Progressing Cavity Pumps technology** with a highly modular, eco-friendly design. The EcoMoineau™ C pump requires less space for installation which reduces costs and facilitates its integration.

The EcoMoineau™ C pump is **lighter** (less raw materials) and **uses 10% less power** than most progressing cavity pump on the market. The energy used to manufacture, transport and operate the EcoMoineau™ C pump is therefore optimised.

This PCP is made with fewer parts compared to competitors models. This new stainless steel pump has **a multitude of design features** that make **installation, operation and servicing easier than ever before**.

TECHNICAL PERFORMANCES

- **Pressure :** 16 bars
- **Flowrate :** 110 m^3/h
- **Particles size:** 32 mm

RANGE

- 25 models

EXAMPLES OF APPLICATIONS

Recommended for non microbiologically sensitive food applications:

- Fruits and vegetables (soup, sauce, jam, puree...)
- Beverages (fruit juice, thick juice, wine, additives,...)
- Glucose, syrups, massecuite, molasses
- Pasteurised preparations
- Grease, oil (colza, olive, ...), enzymes

PUMP CONSTRUCTION

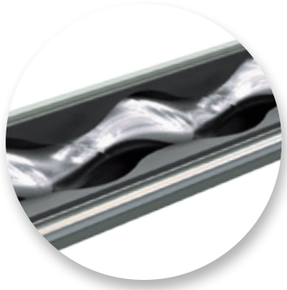

1 HIGH PERFORMANCE AND QUALITY ELASTOMERS DEVELOPED IN OUR STATE-OF-THE-ART LABORATORY

3 INVENTIVE FLANGE MULTI-STANDARD

2 PATENTED CONNECTING SYSTEM

Pump joint < 90m³/h

4 REVOLUTIONARY JOINT

JOINT ASSEMBLY BENEFITS

- **Cost and stock savings:** same joint assembly for all models from the same module
- **Maintenance time saving:** 3 screws only to dismantle the joint
- **Patented connecting system**
- **Durable and robust design:** lifespan increase for non corrosive and non abrasive applications

Pump joint > 90m³/h

ECOMOINEAU™ C RANGE BENEFITS

SPACE SAVING
- Revolutionary joint 80 % shorter
- Revolutionary joint coupling rod length reduced and hardened for long life operation
- Patented connecting system: only 10 cm of clearance required to dismantle the stator

EASY AND QUICK DISMANTLING
- The seal can be changed by simply disconnecting the drive
- The shaft line (rotor, coupling rod, driving shaft) can be removed without disconnecting pipework
- Patented connecting system with 3 screws only

FOOD COMPLIANT
- Food connections and flushing ports
- FDA and European food regulations compliant materials
- Single, double and flush mechanical seals

VERSATILE CONSTRUCTION
Integrated construction
- Cost-effective solution including single bellow mechanical seal (self-positioning)
- Shortest and lightest design

Monobloc and bearing construction
- Five sealing solutions available
- Spacer with improved access to the sealing system
- Rubber deflector: protecting the drive and bearing

ECO-DESIGN PUMP
- 10% less power consumption compared to most Progressing Cavity Pump's on the market
- Less raw materials

VISCOFEEDER

Transfer and dosing solutions for hyper-viscous products

The growing demand for more concentrated and sophisticated products often implies an increase in the viscosity of the products being transferred. If your product is viscous, pasty, sticky, greasy, thick or concentrated, PCM provides an appropriate solution for each type of rheology.

PCM Viscofeeder is a **force-feed system** that offers an **accurate transfer and dosing of highly viscous product** with optimum steady flow and high accuracy for any number of production lines.

TECHNICAL PERFORMANCES

- **Pressure :** 16 bar
- **Flowrate :** 24 m³/h
- **Viscosity :** 15 000 000 cPo
- **Hopper :** cleanable in place (CIP)

EXAMPLES OF APPLICATIONS

- Transfer of cheese mixtures from the kneading through mixer to the packaging line
- Co-extrusion inner of dry pet-food
- Continuous deposit of dough mix in the desired shape
- Feeding of an extrusion head for biscuit filling
- Dosing and continuous injection of caramel and hyper viscous ingredients

SYSTEM CONSTRUCTION

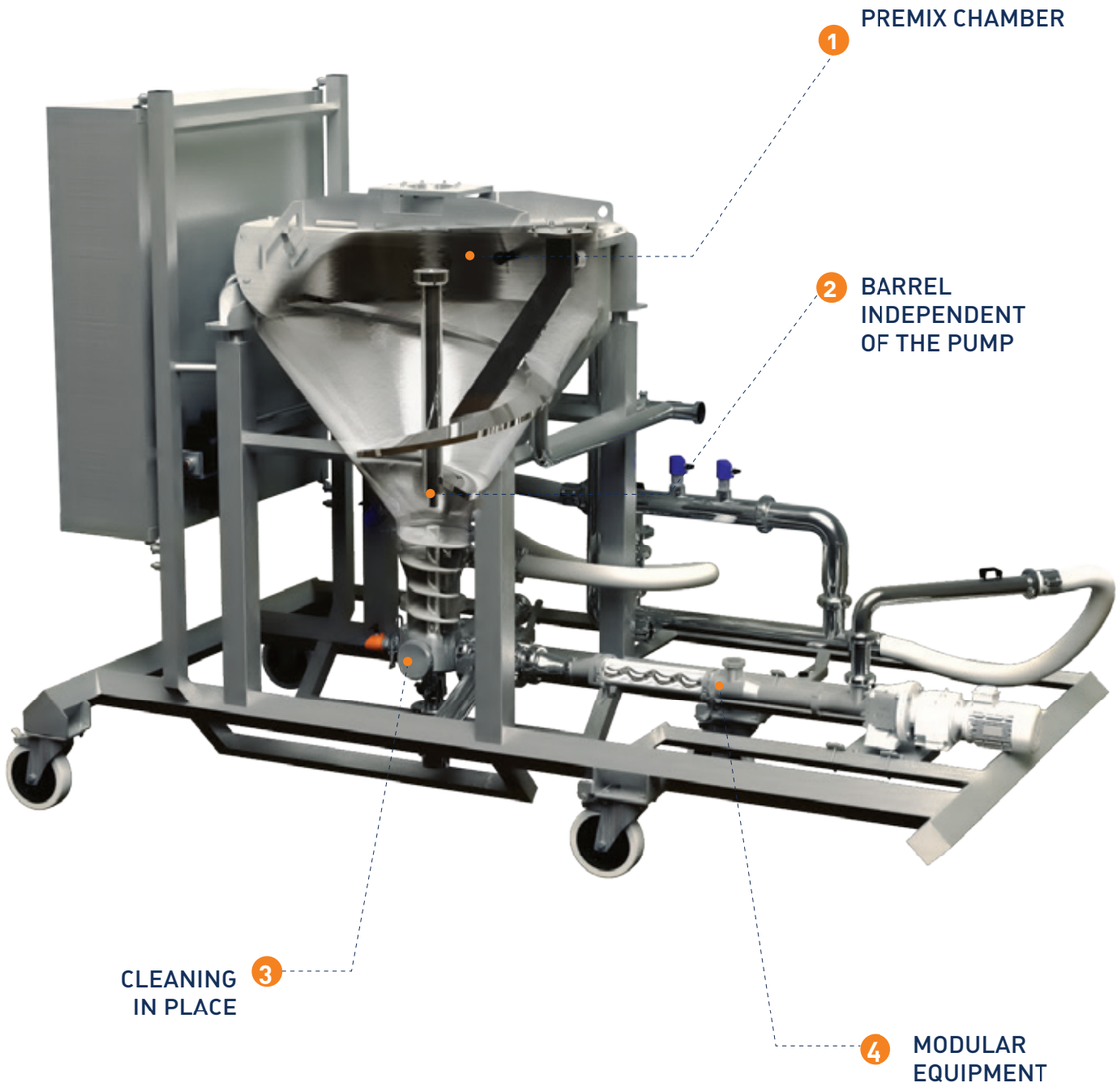

VISCOFEEDER RANGE BENEFITS

VERSATILITY
- Transfer and dosing of highly viscous/sticky products up to 15 000 000 cPo

ACCURATE BATCH OR CONTINUOUS DOSING
- From 10 ml to several kilos
- Barrel independent from the pump
- Feeding of pumps at controlled pressure

QUALITY AND HYGIENE
- Continuous homogenisation of the products without introduction of air
- Low shearing
- Cleaning in place: gravity drainage of whole installation, cleaning of hidden areas
- Strict hygiene standards

PRODUCTIVITY
- Continuous production with batch loading of product
- Temperature controlled operation
- Modular equipment: using one or several positive displacement pumps

FLEXIBILITY
- High precision (> 2%)regardless of the number of production lines, the flow and the product

IVA / LVA / GVA / GBB

Viscous and non-homogeneous products

IVA / LVA / GVA / GBB pumps are fitted with **a feeder hopper and a conveyor screw**. The open-throat design allows the fluid to flow in without restriction while the screw feeds the materials into the rotor/stator.

These pumps are the ideal solution for **the transfer of high-viscosity, non-homogeneous and pasty products**. This is a compact solution for a **simplified integration**, a **small investment** and a **low power consumption**.

IVA model

IVA/LVA TECHNICAL PERFORMANCES

- **Pressure :** 40 bar
- **Flowrate :** 300 m³/h
- **Hopper :** 72 x 156 to 590 x 590 mm
- **Accessories:** built-in or remote frequency variator, dry running protection, safety pressure switch

GVA / GBB TECHNICAL PERFORMANCE

- **Pressure :** 40 bar
- **Flowrate :** 32 m³/h
- **Hopper :** length 500-1000-1500 mm
- **Accessories:** built-in or remote frequency variator, dry running protection, safety pressure switch

EXAMPLES OF APPLICATIONS

- Pectin
- Fish flesh
- Apple dregs
- Mashed potatoes
- Meat emulsions ...

IVA/LVA PUMP CONSTRUCTION

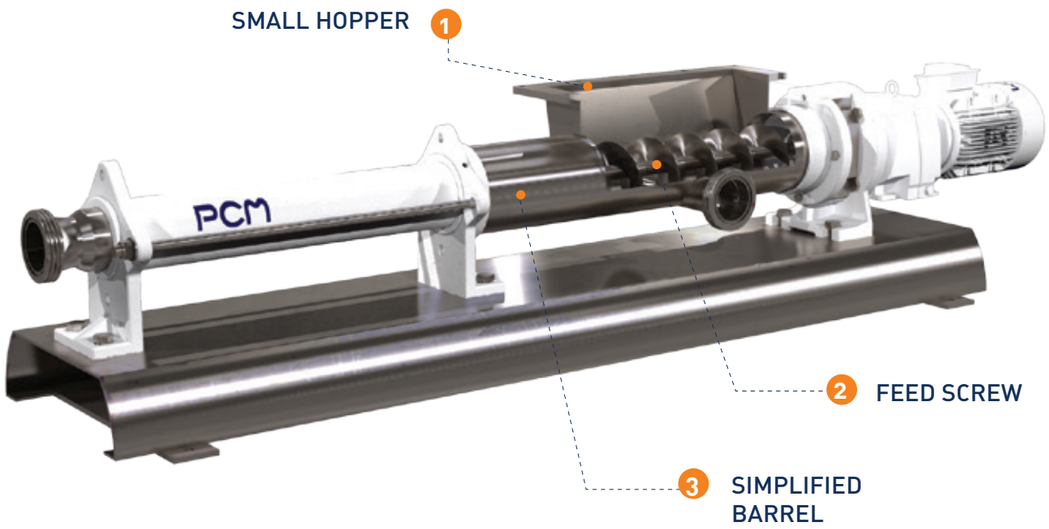

GVA/GBB PUMP CONSTRUCTION

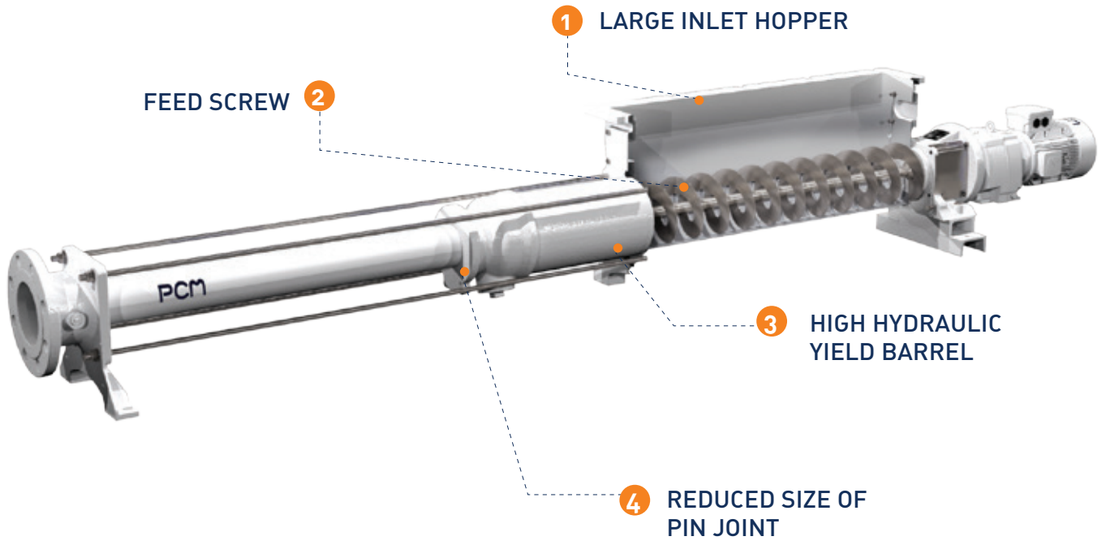

IVA / LVA RANGE BENEFITS

COMPACT SOLUTION
- Simplified integration
- Small hopper: compact size

VERSATILITY
- Transfers high-viscosity, non-homogeneous and pasty products
- The feed screw facilitates product flow
- Simplified barrel that promotes auto-flow of a more or less viscous liquid product

COST SAVING
- Small investment
- Low power consumption

OPTIONS

- Drain plug that enables total drainage
- Polished finish (LVA option)
- Stainless steel base
- Hopper: 76x161 to 440x440 mm

GVA/GBB RANGE BENEFITS

PRODUCTIVITY
- Improved circulation of the fluid thanks to the hopper's shape
- Elimination of cavitation and elimination of the risk of product bridging in the inlet hooper
- For higher viscosity products, the GVA can be fitted with an optional motorised bridge breaker.

VERSATILITY
- Transfers very viscous products
- Accomodates non-homogeneous, pasty and sticky fluids

COMPACT SIZE
- Reduced size of pin joint that facilitates product flow

OPTIONS

- Drain plug that enables total drainage
- Grease sealing
- Special finish: polished, glass blasted... depending on the product
- Bridge-breaker
- Flow management with level control module in the hopper
- Double jacket to maintain the product's temperature
- Built-in Cleaning In Place

PCM DELASCO™ PERISTALTIC PUMPS

The ideal choice to reduce maintenance costs

PRINCIPLE OF DELASCO™ TECHNOLOGY

The peristaltic pumping principle is based on the capacity of a soft elastomer hose to accept a deformation and subsequently recover its initial shape. Peristaltic pumps are provided with either high or low pressure hoses, covering a wide range of applications which need versatility and flexibility.

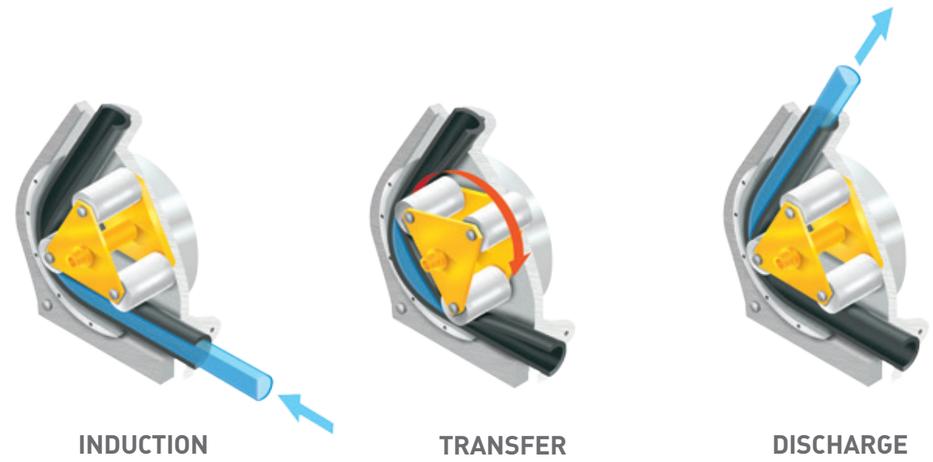

BENEFITS

- Only one wearing part: the hose
- Seal-less design
- Self-priming
- High suction capacity
- Simplified maintenance
- Low life cycle costs
- No mechanical seals, valves or gaskets

RANGE OF PCM PERISTALTIC PUMPS

- DL Series

DELASCO™ - DL SERIES

Peristaltic pumps for corrosive, abrasive and fragile products

With various pump constructions and a wide choice of elastomer hoses, the PCM Delasco™ range covers a **wide variety of applications** calling for heavy-duty and flexibility.

Simple to use and to maintain, PCM Delasco™ peristaltic pumps can be adapted to a multiple constraint.

Peristaltic pumps with low operating speeds are ideal for **fragile and/or abrasive products**: the transfer is carried out inside the hose without agitating or frothing the fluids.

They are also the perfect solution to handle **corrosive products** as only the hose is in contact with the fluid.

TECHNICAL PERFORMANCES

- **Pressure :** 15 bar
- **Flowrate :** 20 m^3/h
- **Accessories**: hose-leak detector, pulsation dampener, vacuum pumping, trolleys

RANGE

- 6 models

EXAMPLES OF APPLICATIONS

- Tomato puree
- Fruit puree
- Soya oil
- Ferments
- Crushed vegetables
- Diatomaceous earth...

PUMP CONSTRUCTION

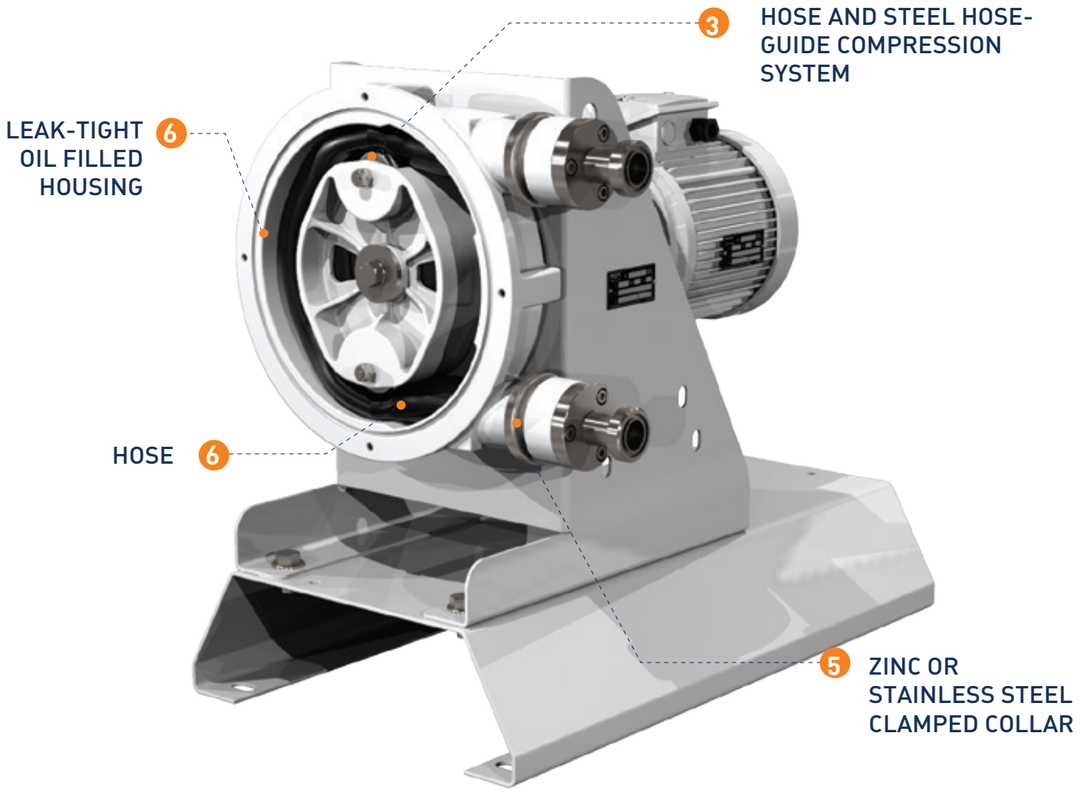

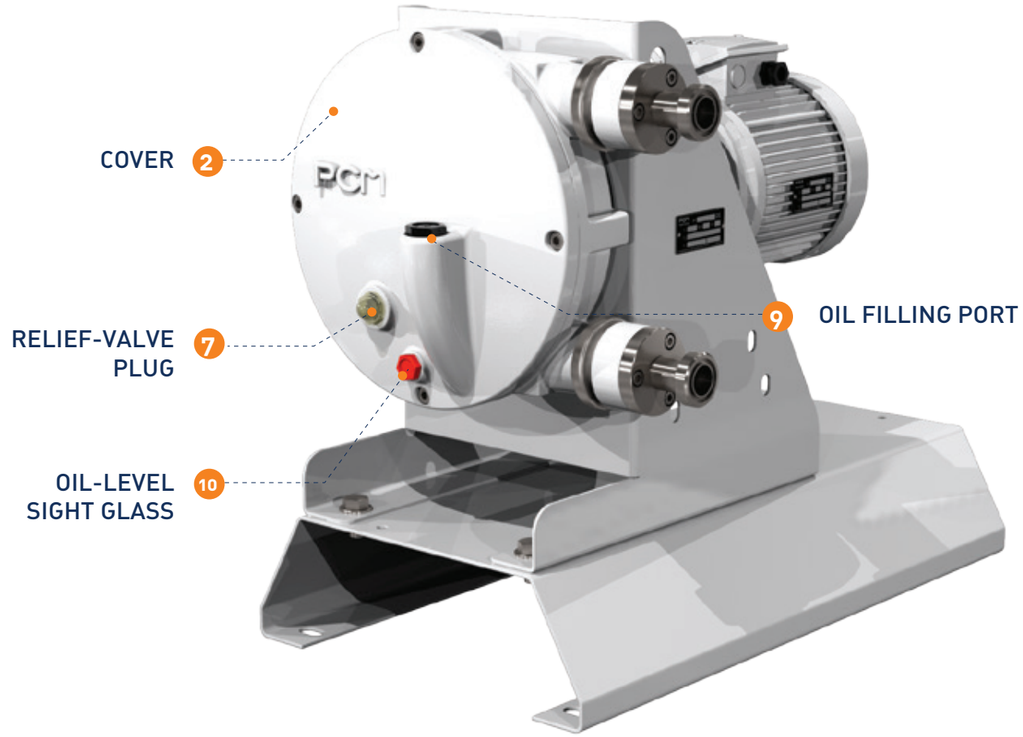

DELASCO™ RANGE BENEFITS

REDUCED MAINTENANCE
- Only one wearing part: the hose

REVERSIBILITY
- The design of the pump makes it perfectly reversible by simply acting on the direction of rotation.

VERSATILITY
- Corrosive products: only the pump hose is in contact with the fluid. This eliminates all the corrosion problems associated with acidic (hydrochloric sulfuric, nitric...) or basic (detergents sodium hydroxide or hypochlorite) products.
- Abrasive products: the elastomer hose resists better to abrasion than a metallic surface.
- Delicate products: the transfer is carried out inside the hose without agitating or frothing the fluids.

REDUCED LCC
- The Life Cycle Costs have been optimized at every stage of the pump life: from its conception, operational time and maintenance duties.

WHITE FOOD NITRILE HOSES FOR DELASCO™ PUMPS

The hose is made out of white food grade nitrile. For high pressure resistance, its has 4 reinforced layers and its outside cover is made out of natural rubber for the utmost mechanical resistance.

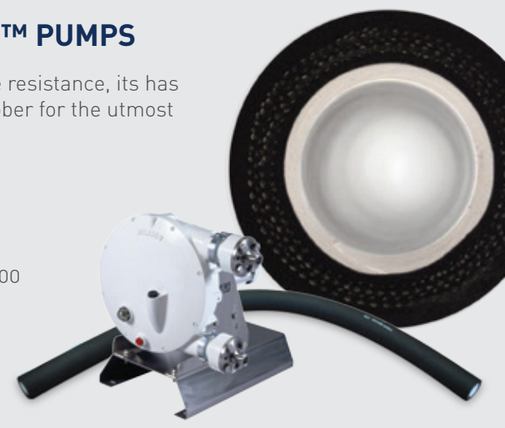

USE:
- Max pressure: 10 bar
- Max temperature: 80°c
- Cleanable in place
- Food contact oil

CERTIFICATES:
- CE 1935/2004
- FDA 21 CFR 177.2600
- DM 21/03/73

OTHER AVAILABLE HOSES:

- **Natural rubber**: for abrasive products, diluted acids, alcohols
- **EPDM**: resistance to chemicals, concentrated acids

PCM LAGOA DIAPHRAGM DOSING PUMPS

Accuracy and reliability: ingredients of successful dosing

PRINCIPLE LAGOA TECHNOLOGY

The Lagoa pump is composed of a diaphragm connected to a piston which alternating movement successively fills and empties the pumphead.

1- The backward movement of the diaphragm opens the bottom check valve and allows the entry of fluid, which fills the pumphead.

2- The forward movement of the diaphragm closes the bottom check valve, opens the top check valve and expels the dose.

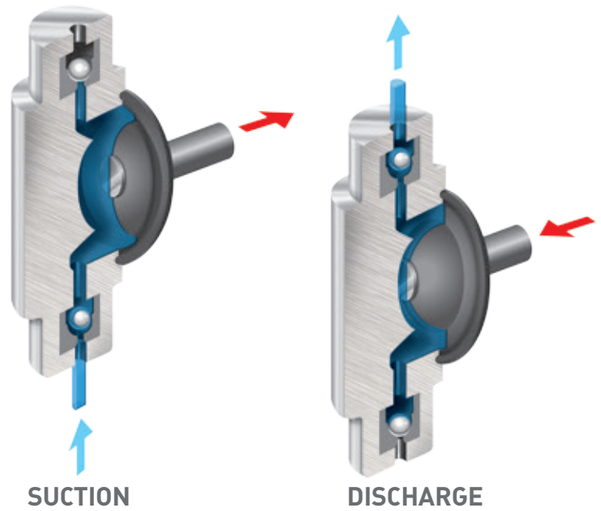

BENEFITS

- Reliability of metering
- Simplified maintenance
- Dry-running
- Simple and robust

RANGE OF PCM DIAPHRAGM DOSING PUMPS

- Lagoa

LAGOA

The food diaphragm dosing pump

The Lagoa Series is designed for metering a wide variety of products in the food and personal care industries.

The Lagoa pump is composed of a diaphragm connected to a piston of which the alternating movement successively fills and empties the pumphead.

The backward movement of the diaphragm opens the bottom check valve and allows the entry of fluid, which fills the pumphead. The forward movement of the diaphragm closes the bottom check valve, opens the top check valve and expels the dose.

TECHNICAL PERFORMANCES

- **Maximum flowrate:** 315 l/h per pumphead
- **Maximum pressure:** 12 bar
- **Maximum temperature:** 90°c
- **Accuracy:** +/- 1%
- **Linearity:** +/- 3%
- **Adjustable from 10 to 100%**

EXAMPLES OF APPLICATIONS

- Additives, colourants, liquor, starch, starch milk
- Bases and/or acids, antibacterial solutions in cleaning in place processes
- Flavours, colourants, yeast
- Arabic gum, anhydride, casein, gelatin as wineries additives

PUMP CONSTRUCTION

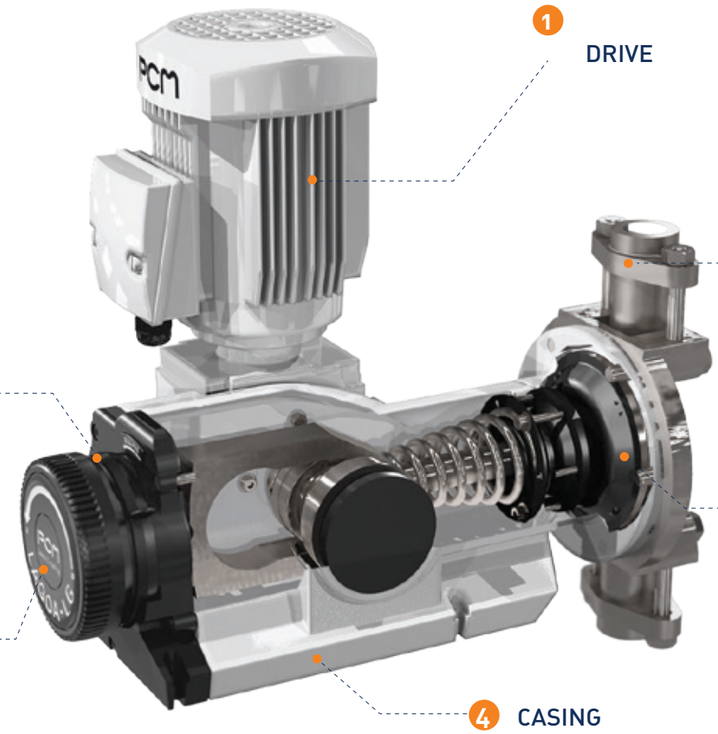

LAGOA RANGE BENEFITS

SIMPLE AND ROBUST CONSTRUCTION
- The pump is driven by a direct mounted light alloy motor with IP55 protection.
- The casing is made of cast aluminium alloy.

RELIABILITY
- Reliability of metering.
- The stroke adjustment mechanism can be locked in position to ensure that stroke length remains at its set point.

VERSATILITY
- Dosing of a wide range of fluids.
- Pumpheads are available in many material combinations. It consists of 1 suction check valve, 1 discharge check valve, 1 liquid end body.
- Dry-running.

SIMPLIFIED MAINTENANCE
- The bearings are greased for life, making the motors maintenance-free.
- The capacity is set by turning the micrometer dial which is fitted with vernier scale graduated in percentage stroke length. Electric servo control can be fitted.
- The pumphead is easy to remove and change.

ELECTRO-MECHANICAL DRIVE
- Does not cause and is not affected by interferences
- Reduced mechanical and hydraulic shocks
- Silent

OPTIONS AND ACCESSORIES

FOOT VALVES
- Filter undesirable particles and keep the pump primed when stopped

INJECTION ROD
- Enables your product to be injected in a vein without polluting the injection pipework (non-return function)

SAFETY AND RETENTION VALVES
- Prevent excess flow and pressures, siphoning and underloading

PULSATION DAMPERS
- To render your flow linear and lessen fluid hammer effects

"READY-TO-METERS" ASSEMBLIES
- Connecting system to the entire pump

LAGOA MULTIPLEXING BENEFITS

- Perform proportional metering with different fluids
- Obtain a greater flow than with one single pumphead
- Phase the pump stroke to prevent pulsations and thereby achieving linear flow

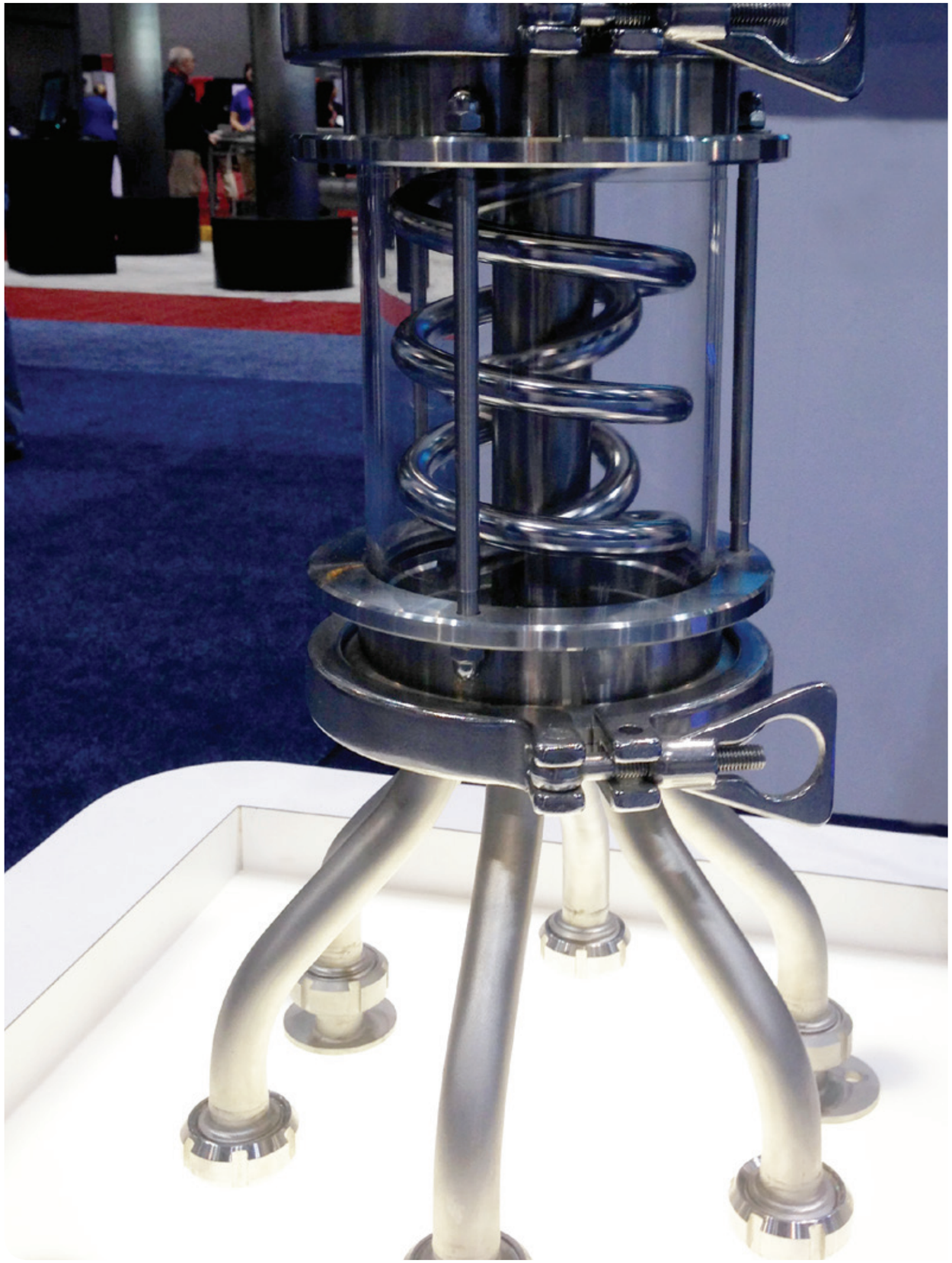

PCM DOSYMIX™ - PCM DOSTAM INLINE MIXERS

More flexibility for varied production

INLINE MIXING PRINCIPLE

The principle of inline mixing consists of replacing the batch mixing tank by a continuous mixer. The mixing operation is carried out more rapidly, in a single pass, and ensures proportional and metered mixing.

This mixing technology is particularly suitable for fragile, shear sensitive or viscous products with or without solids and allows small batch production with rapid changeovers allowing efficient production of different recipes.

Unlike a traditional batch process, the inline mixing enables an homogeneous mixture much faster from the tanks to increasing dispersion.
This homogeneisation is obtained without altering the product and with minimized power consumption.

Through its different technologies, PCM provides 3 possibilities of inline mixing:

- the mixing by continuous injection of bases and additives (proportional dosing) with PCM Moineau™ pumps

- the mixing by continuous injection of bases and additives (proportional dosing) with PCM Dosys™ pumps *(diagrams p.61)*

- the mixing by injection of bases and additives in pulsed mode (Just in Time) with PCM Dosys™ technology pumps synchronised on conditioning nozzles ***(diagrams p.61).***

BENEFITS

- Just in time mixing for products that require an optimised mixing time
- Gentle handling of fragile, shear sensitive and viscous products
- Reduced product losses
- Space savings
- Homogeneous mixing of ingredients
- Cleaning and Sterilisation in Place facilitated

RANGE OF PCM MIXERS

- Dosymix™ dynamic mixer
- Dostam static mixer

DOSYMIX™ INLINE MIXER

Provider of dynamic mixing

The Dosymix™ dynamic mixer preserves the most important asset in your production line: the ingredients.

Thanks to the body design, with twin helixes in opposite directions welded to an impeller, an upward and downward flow is created for **gentle mixing of ingredients and accurate distribution of mixed product**.

The Dosymix™ is **3A** certified (American standards) to ensure a better cleaning efficiency during **Cleaning In Place and/or Sterilisation In Place**.

TECHNICAL PERFORMANCES

- **Pressure :** 10 bar
- **Flowrate :** 6 m^3/h
- **Particles size* :** 25 mm

RANGE

- **5 models**

* According to your products, the Dosymix™ can mix bigger particles.

EXAMPLES OF APPLICATIONS

- Fruits, pulp, syrup in stirred yoghurt
- Sugar, glucose, vitamins, flavours in cream and cheese
- Preparations including grapes in desserts
- Ferment, rennet in cheese...

MIXER CONSTRUCTION

OPERATING PRINCIPLE

The residence time in the mixer body (measured in seconds) ensures the quality of the mix. The residence time depends on 2 factors: the internal volume of Dosymix™ and the production rate (l/h).

OPTIONS

- Tandem mechanical seal
- Heating jacket: for particular applications requiring specific temperature
- Drive cover

DOSYMIX™ RANGE BENEFITS

IDEAL FOR SHEAR SENSITIVE PRODUCTS containing solids or fibers
- The round shaped helix prevents the adhesion of ingredients
- Designed for products mixing with different viscosities and/or proportions

3A HYGIENIC CONSTRUCTION
- CIP and SIP facilitated

LOW INTERNAL VOLUME to minimize product losses

MULTI OUTLET
- Precise distribution and possibility to delay product finalisation

EASY AND QUICK ASSEMBLY/DISASSEMBLY
- Body fixed by Tri-Clamp connection
- Mechanical seal provided in cartridge

MECHANICAL SEAL standardised with HyCare™ progressing cavity pump

DOSYMIX™ TECHNICAL PERFORMANCES

Models	Internal capacity (L)	Weight	Drive power (kW)	Speed rotation - Fixe (rpm)	Speed rotation - Variable (rpm)	Connections
DM 1000	3.8	47	0.75	145 or 300	60 to 300	SMS DIN 11851 DIN 11864 Tri clamp Smooth end
DM 2000	8	53	0.75			
DM 4000	17	90	2.2			
DM 8000	23	107	4			
DM 10 000	30	110	4			

Models	Ø inlet	Outlet manifold Number of outlet & Ø				
		1	2 to 4	5 & 6	7 & 8	9 to 12
DM 1000	51	51	25/38	25	25	-
DM 2000	51	51	25/38	25	25	-
DM 4000	63.5	63	25/38	25/38	25	25
DM 8000	76	76	25/38/51	25/38/51	25/38	25/38
DM 10 000	76	76	25/38/51	25/38/51	25/38	25/38

DOSTAM INLINE MIXER

The static mixer accessible to everyone

With a simple design, the Dostam is a **static mixer** easy to integrate in your installation.

No power is required to use it. Product is pumped through the static mixer via the transfer pump located upstream of the installation.

PCM Dostam is recommended for the **mixing of homogeneous fluids without pieces**.

TECHNICAL PERFORMANCES

- **Flowrate :** 0.5 to 30 m^3/h

RANGE

- **5 models**

EXAMPLES OF APPLICATIONS

- Oil and flavours, vitamins
- Drinking yoghurts, aromas, pulps
- Beverages, water, syrup
- Chocolate, flavours

MIXER CONSTRUCTION

FIXED 10 HELICAL LINKS

Surface finishes: polished (RA 0.8 µ)

STAINLESS STEEL TUBE WITH CONNECTION FITTINGS AND STOPPER

Surface finishes:
polished RA 0.8 µ (interior)
glass blasted RA 1.6 µ (extrerior)

OPERATING PRINCIPLE

The fluid velocity through the chain enables efficient mixing.

When the fluid encounters the 1st link, it is divided into two streams, and then four in the 2nd link, and so forth. This division of the flow as well as the fluid rotation through the crosscutting 90° left and 90° right of the links, allows homogeneous mixing.

The upstream pumps, for bases and additives, can be set up with a continuous flowrate (Moineau™ technology) or with a synchronised pulsating flow (Dosys™ technology).

The mixer must be correctly sized to provide sufficient operating speed and guarantee a mixture quality.

DOSTAM RANGE BENEFITS

DESIGNED FOR NON HOMOGENEOUS PRODUCTS MIXING

The Dostam range consists of 5 models enabling to handle from 800 liters to 30 000 liters/h. It is the **ideal solution for mixing homogeneous or non sensitive fluids** such as: water, syrup, drinking yoghurts, fruits pulps, oils, flavours.

LOW INTERNAL VOLUME to minimize product losses.

The low internal volume of these mixers is comprised between 0.2 liters to 5.4 liters depending on the model. It is extremely low and advantageous during installation cleaning.

EASY INTEGRATION

Although links ramp is a complex and technical component, the Dostam is a simple equipment to integrate into your industrial process as it can be simply connected to the existing piping.

CONSTRUCTION

Vertical or horizontal downward

ENERGY SAVINGS AND EASY MAINTENANCE

PCM Dostam is a static mixer. There is no drive, the fluid transfer is generated through the upstream pump. **Our mixers contain no moving parts, that means no wearing parts** (excluding joints).

DOSTAM TECHNICAL PERFORMANCES

Models	Internal capacity (L)	Weight	Ø Inlet exterior pipe	Ø Inlet interior pipe	Total lenght (mm)	Connections	Ø SMS & Tri Clamp	Ø DIN mâle
DS25.10	0.2	0.8	25	23	484	SMS DIN 11851 Tri clamp	25	25
DS38.10	0.7	1.7	38	36	737		38	40
DS51.10	1.6	3	51	48.5	946		51	50
DS63.10	2.8	5	63	60.5	1133		63	65
DS76.10	5.4	7.5	76	72.8	1320		76	80

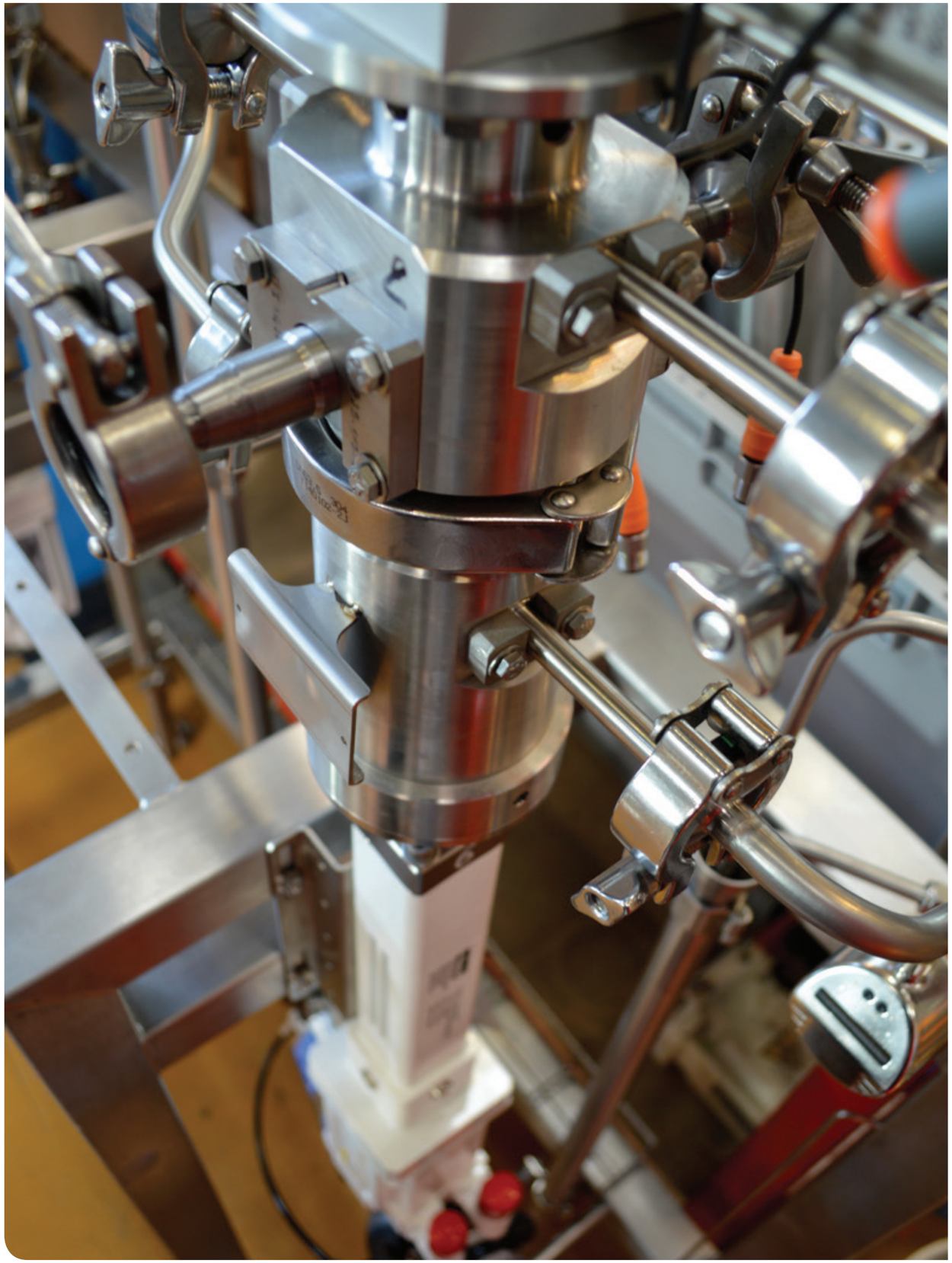

PCM DOSYS™ DOSING, FILLING, INJECTION SYSTEMS

The keys of a perfect dosing and filling

PRINCIPLE OF DOSYS™ TECHNOLOGY

Dosys™ pump technology sits at the heart of all PCM systems. Invented by PCM, it makes it feasible to replace wasteful systems with highly accurate and efficient inline injection.

Dosys™ pump automatically synchronises dosing volumes with the filling station for optimal performance. It also meters the ingredients with precision, thanks to servo-driven piston and a patented flow-control valve. Dosys™ pumps are designed to handle liquids, semi-solids and viscous products without degrading their texture.

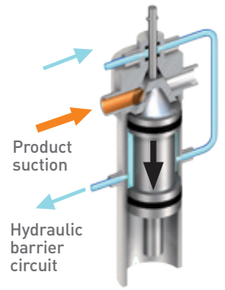

INTAKE

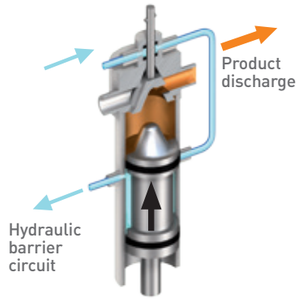

DISCHARGE

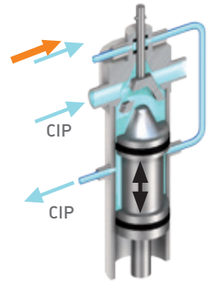

CLEANING IN PLACE (CIP)

BENEFITS

- It meters the ingredients with precision (repeatability: 0.5%)
- Dosys™ pumps handle ingredients with large semi-solids (up to 48 mm) without damaging them
- Because there is no rotating movement, solids remain suspended in the liquid medium; no emulsion or aeration is created
- Dosys™ pumps can be cleaned in place (CIP/SIP)

RANGE OF PCM DOSING, FILLING AND INJECTION SYSTEMS

- Dosyfruit™
- Hopper station
- Dosing unit
- Additive station
- Flavor filling station
- Pouch filling station
- Multi-injection station

PCM DOSYS™ PUMP PERFORMANCES

Dosys™ pump		Capacity in cc per cycle		Maximum production rate (cycles/minute)		Maximum solid size (mm)	Maximum pressure (bar)
		Min.	Max.	50% capacity	100% capacity		
8/20-8	Brushless	0.05	1.01	80	60	6	20
	Pneumatic	0.10	1.01	80	60	6	20
	Brushless 3-A	0.05	1.01	80	60	6	20
12/20-8	Brushless	0.10	2.26	80	60	6	20
	Pneumatic	0.20	2.26	80	60	6	20
	Brushless 3-A	0.10	2.26	80	60	6	20
24/20-8	Brushless	0.45	9.05	70	50	6	20
	Pneumatic	0.90	9.05	70	50	6	20
	Brushless 3-A	0.45	9.05	70	50	6	20
24/40-16	Brushless	0.90	18.1	70	50	16	20
	Pneumatic	1.80	18.1	70	50	16	20
	Brushless 3-A	0.90	18.1	70	50	16	20
36/40-16	Brushless	2.00	40.72	70	50	16	11
	Pneumatic	4.10	40.72	70	50	16	11
	Brushless 3-A	2.00	40.72	70	50	16	11
48/100-23	Brushless	9.05	180.96	50	40	23	20
	Pneumatic	18.10	180.96	37	30	23	20
	Brushless 3-A	9.05	180.96	50	40	23	20
63/100-23	Brushless	15.60	311.72	50	40	23	17
	Pneumatic	31.20	311.72	37	30	23	19
	Brushless 3-A	15.60	311.72	50	40	23	17
72/100-23	Brushless	20.40	407.15	45	35	23	13
	Pneumatic	40.70	407.15	37	30	23	14
	Brushless 3-A	20.40	407.15	45	35	23	13
90/100-35	Brushless	31.80	636.17	40	35	35	9
	Pneumatic	63.60	636.17	30	25	35	9
	Brushless 3-A	31.80	636.17	40	35	35	9
130/100-48	Brushless	66.40	1327.32	25	20	48	4
	Pneumatic	132.70	1327.32	25	20	48	4
	Brushless 3-A	66.40	1327.32	25	20	48	4
130/200-48	Brushless	132.70	2654.64	20	15	48	4
	Pneumatic	265.50	2654.64	20	15	48	4
	Brushless 3-A	132.70	2654.64	20	15	48	4

INLINE DOSING

PCM Dosys™ dosing systems, associated with mixing solutions, enable you to implement fully automated inline processes. These dosing solutions include the end of containers detection and management, no intertwining areas in case of ingredients changeover, and cleaning in place (CIP) phases.

Injection / mixing before buffer tank

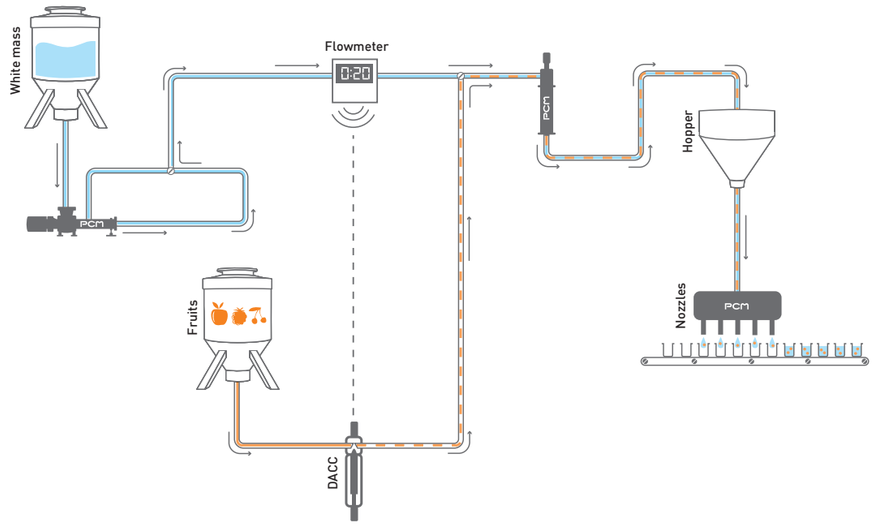

Injection / mixing after buffer tank ("just in time" mode)

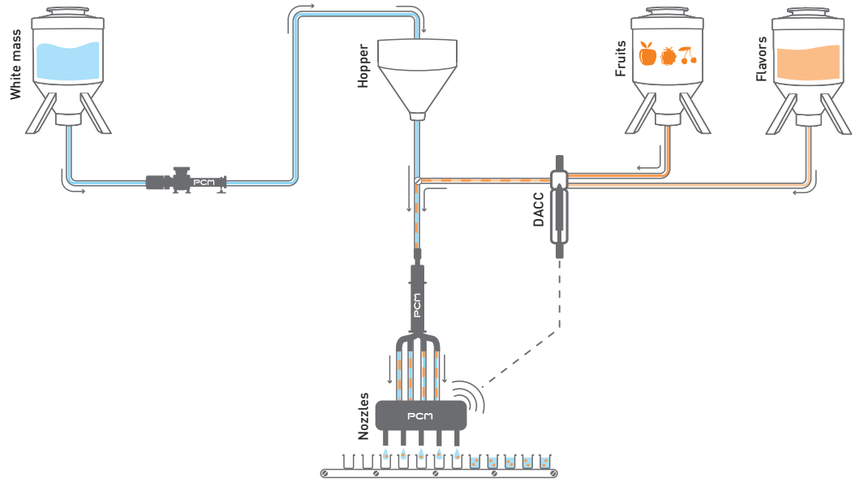

DOSYFRUIT™

Fully automatic multi-ingredients station

SYSTEM CONSTRUCTION

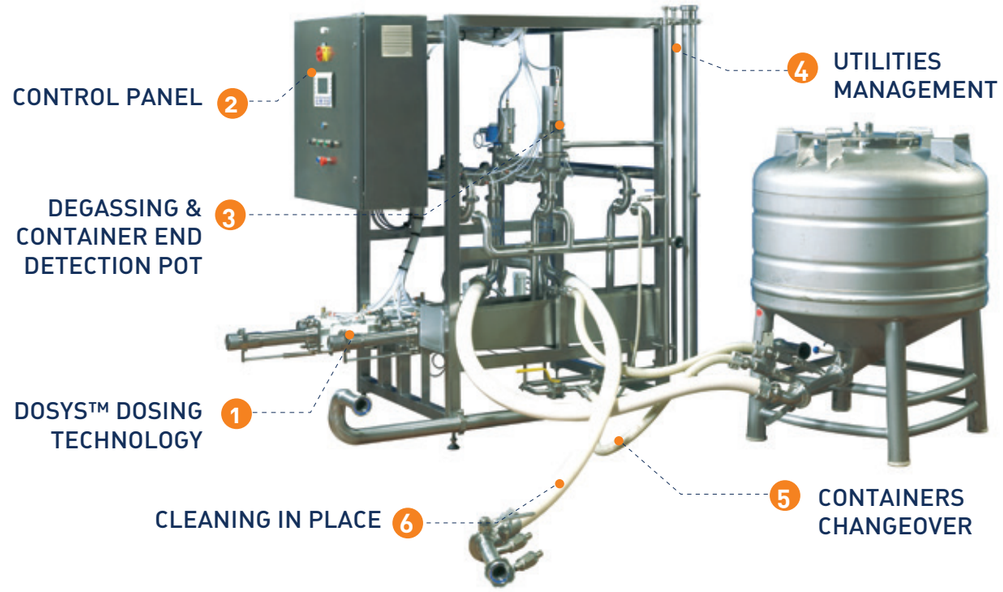

DOSYFRUIT™ RANGE BENEFITS

RESPECT OF PRODUCTS
- Considerable reduction of fruit losses
- Gentle handling of ingredients

PRODUCTIVITY
- Dosing of 1 to 4 different fruits, in containers or bag in box (ground or height)
- End of containers and degasing detection pot
- Automatic container changeover
- Dosing synchronisation by the conditioning and packaging machine, or depending on the raw matearial flowrate
- Manual or automatic valves
- Pneumatic or electric motorisation

ACCURACY AND FLEXIBILITY
- 100% reliable and repeatable through to the electric actuator
- Limited loss of ingredients through transition pushes and without rinsing
- Optimised and automatic management of the start and the end of production for multi-ingredients recipes

HYGIENIC
- Complete Cleaning and Sterilization In Place (sterile air, steam, containers foot sterilisation, injection point)

3 RANGES OF DOSYFRUIT™ SYSTEMS

		BASIC	PREMIUM	COMPACT	Productivity optimisation	Fruit losses limitation	Hygiene improvement	Flexibility saving	Safety improvement
Fruits conditioning	Type of conditioning	Container or BIB	Container or BIB	Container or BIB				++	
	Type of connection	Multiple	Multiple	Multiple				++	
	Conditioning positioning	Beside the station	Beside the station	Below the station				+	
	Number of different fruits	1	1 to 4	1 to 4	++			+++	
	Overpressured containers (sterile air or azote)	N/A	○	○	+		++		
Start of production	Fruits priming from the container to the dosing unit	● (Manual)	● (Automatic)	● (Automatic)	++		+		
	Fruits priming from the dosing unit to the injection point	● (Automatic)	● (Automatic)	● (Automatic)	++				
Production	Fruit dosing synchronised to the white mass flowrate (inline dosing)	○	○	○	++			+	
	Fruit dosing synchronised to the conditioning equipment ("just in time" dosing)	○	○	○	+++	+++		+	
	Automatic container/BIB changeover	○	○	○	++			+	
	Fruit change with fruit-on-fruit push	● (Manual)	● (Manual) ○ (Automatic)	● (Manual) ○ (Automatic)	++	++			
	Fruit change with intermediate water push	● (Manual)	● (Manual) ○ (Automatic)	● (Manual) ○ (Automatic)	+				
	Change of a single fruit on a multi-fruit installation	N/A	●	●	+				
	Degassing of the dosing unit detection pot	○	○	○	++				
	Degassing of the dosing unit detection pot with minimised fruit losses	N/A	○	○	+	+			
	Dissociated synchronisation of the pushes for a multi-fruit installation	N/A	●	●	+++		++	+++	
	Container foot rinsing only before dismantling	N/A	○	○			++		
	Rinsing and sterilising from the container to the dosing unit only	N/A	○	○	+	+	++		
	Control of the sterilisation temperature of the container foot only	N/A	○	○			++		
	Rinsing and sterilisation from the container to the dosing unit only	● (Manual)	● (Automatic)	● (Automatic)			+		
	Control of the sterilisation temperature from the container to the dosing unit	N/A	○	○		++			
End of production	Synchronisation with the stop of the conditioning machine	●	●	●	++			+	
	Water push	● (Manual)	● (Manual) ○ (Automatic)	● (Manual) ○ (Automatic)			++		
Cleaning / Sterilisation	Rinsing and sterilization of the complete line before production	● (Manual)	● (Automatic)	● (Automatic)			+		
	Control of the sterilizing temperature of the complete line	N/A	○	○			+		
	Water break	N/A	○	○		++			
	Pipes purge after rinsing and sterilisation	N/A	○	○			+		
	Valves control	N/A	●	●	+				
	Dosing unit hydraulic barrier	● (Manual)	● (Automatic)	● (Automatic)					
	Injection valves + sight	○	○	○	+	+			
	Integrated dynamic mixer	○	○	○	+		+		
	Integrated static mixer	○	○	○	+				
	Hygienic insulation of the container foot coupler to fruits	N/A	○	○					
	Safety sensors on CIP/SIP connectors	N/A	○	○					++
	Steam pipes coversheet	○	○	○					++
	Containers/BIB weighing	N/A	N/A	○	+				

● Function available ○ Function in option **N/A** Function unavailable in this version

3 RANGES OF DOSYFRUIT™ SYSTEMS

Dosyfruit™ Basic
Mono ingredient and manual valves

Dosyfruit™ Premium
Multi ingredients, automatic valves and minimum fruit losses between productions

Dosyfruit™ Compact
Multi ingredients, automatic valves, minimum fruit losses between productions and containers below the station

EXAMPLES OF APPLICATIONS

- Dosing of fruits in yoghurt white mass
- Dosing of non homogeneous ingredients (fluids or solids) for convenience food

HOPPER STATION

Semi-automatic mono-ingredient station with cleaning in place

SYSTEM CONSTRUCTION

HOPPER STATION BENEFITS

PRODUCTIVITY

- Integrated ingredient preloading tank
- Programming of several recipes
- Detection of product end
- Pneumatic or electrical motorisation
- Semi-automatic or manual operation

HYGIENE

- Complete Cleaning and Sterilisation In Place (hoppers and system)

EXAMPLES OF APPLICATIONS

- Inline injection and mixing of flavors to the yoghurt fruit preparation
- Precise dosing of concentrated aromas

ADDITIVE STATION

Semi-automatic dosing station of flavorings and liquid additives

SYSTEM CONSTRUCTION

ADDITIVE STATION BENEFITS

PRODUCTIVITY AND SIMPLICITY

- Stainless steel suction rod with low level detection to control the end of the tray
- Integrated control cabinet and control LEDs
- No hopper
- Dosing synchronisation by the conditioning and packaging machines, or depending on the main product flow
- Compact and easy integration to existing facilities station
- Dosys™ technology

HYGIENE AND FOOD SAFETY

- Cleaning In Place of the dosing unit and the injection rod
- No more risk of product without commensurate ingredients

EXAMPLES OF APPLICATIONS

- Flavouring, colouring, sowing of dairy products and other bases...
- Concentrated aromas, vitamins injection in drinks...

DOSING UNIT

Semi-automatic single-ingredients station

SYSTEM CONSTRUCTION

DOSING UNIT BENEFITS

PRODUCTIVITY

- Removable ingredient pre loading tank
- Programming of several recipes
- Detection of product end
- Fixed or wheels mounted frame
- Pneumatic or electric motorisation

EXAMPLES OF APPLICATIONS

- Dosing of non homogeneous ingredients (liquid and solid) for convenience food
- Dosing of viscous products

FLAVOR FILLING STATION

Diluted and concentrated flavors injection

SYSTEM CONSTRUCTION

FLAVOR FILLING STATION BENEFITS

SIMPLE AND OPERATIONAL SYSTEM
- Control panel with control by flowmeter or by the top of the packaging machine

DOSYS™ TECHNOLOGY
- +/- 0.5% with concentrated flavours

FOOD SAFETY
- Fully cleanable in place: from the suction rod to the nozzles plate

PRODUCTIVITY
- Stainless steel suction rod with low level detection probe to control the end of tin

POUCH FILLING STATION

Sauces dosing station

SYSTEM CONSTRUCTION

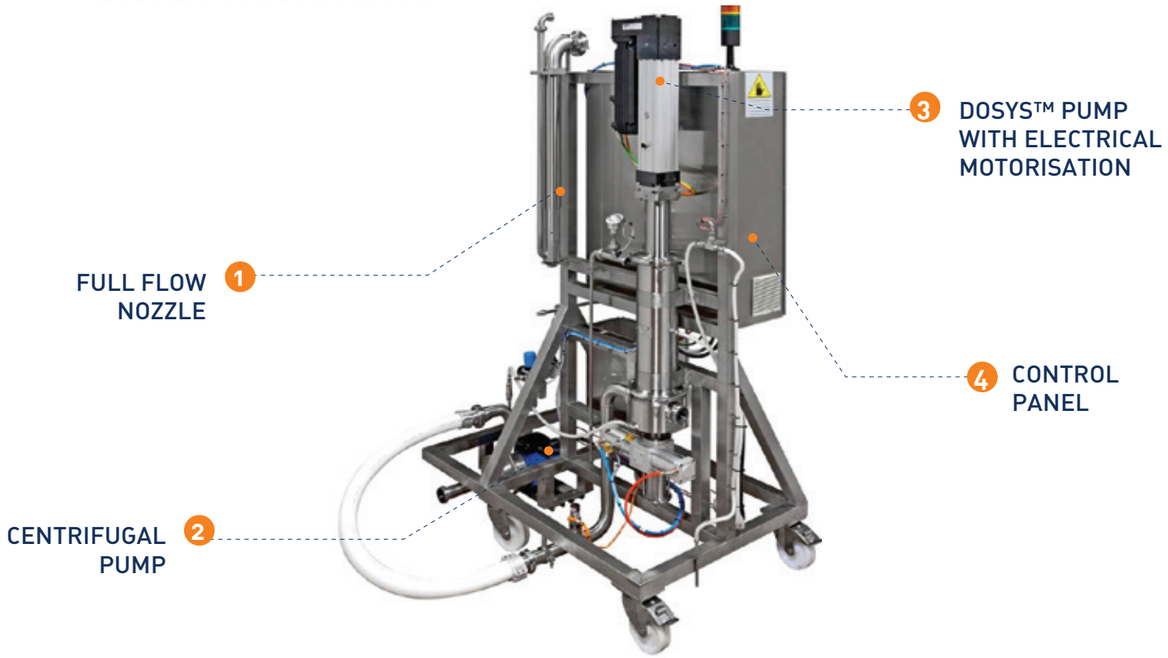

POUCH FILLING STATION BENEFITS

FOOD SAFETY
- Full flow nozzles for sauces with pieces, with integrated sensor for monitoring the injection temperature

EFFICIENCY
- Remote control of the quantities and the filling speeds

VERSATILITY
- Control panel with up to 50 programmed recipes (volumes, shapes)

AUTONOMY
- Centrifugal pump for CIP

EXAMPLES OF APPLICATIONS

- Sauces with or without pieces, liquid or viscous in sachets for convenience food

MULTI-INJECTION STATION

SYSTEM CONSTRUCTION

MULTI-INJECTION STATION BENEFITS

SYNCHRONISATION
- Four dosing units with 4 to 16 heads per unit with individual dose adjustment.

VERSATILITY
- Needles distribution plate, with lift-and-lower system to suit different kinds of buns.

EXAMPLES OF APPLICATIONS

- Injection of precise doses of aromas, jam, chocolate in buns

AT YOUR SERVICE

In order to provide the best use of our pumps and pumping systems, we offer a wide range of pre- and post-sales services.

All of our services are designed with one goal in mind: optimising the performance of PCM pumps and systems. From preventive maintenance to spare parts management, from equipment upgrading to training, we strive to best contribute to the productivity of our customers.

EXTENDED WARRANTY

The extended warranty ensures:

- an extension of our guarantee according to our General Sales Conditions,
- the best solution for delayed installation or commissionning cases,
- the peace of mind at a reasonable cost.

Our extensive service includes also an extension for the general guarantee conditions for a period from one to four years according to your requirements.

TESTS

To ensure the performance and lifespan of a pump or a system, it is vital that the equipment is engineered to meet the needs of the materials being handled. That is why we provide a wide offer of tests:

- chemical compatibility tests,
- viscosity tests,
- abrasiveness tests.

TRAINING

In order to support and train the professionals who handle our pumps and systems, we can arrange training sessions either on customer or PCM site.

The use of achieved knowledge enables the participants of the training to maintain the value of the pump or system to minimise the consequential costs for maintenance or service even more.

INSTALLATION AUDITS

The Life Cycle Costs audit will optimise the use of your pump while reducing costs related to inefficiency, rationalising your stock of spare parts and controlling your overall costs.

Our extensive service includes:

- a complete inspection of your facilities,
- an analysis of your spare parts consumption,
- a detailed report and our recommendations to help you optimise your costs.

MAINTENANCE, REPAIRING & UPGRADE

We offer a full range of services to ensure optimum operation of your pumps as well as time and cost savings.

Maintenance services for PCM pumps are provided by our highly trained engineers. This ensures that pumps and systems are maintained at optimal operating levels. Our careful monitoring and expertise helps to minimise production downtime and increase the global run life of the system.

We provide a wide range of after-sales services:

- maintenance on customer's site,
- PCM workshop maintenance,
- maintenance contracts,
- mechanical seals and rotors refurbishement,
- systems upgrade.

SPARE PARTS

Thanks to our worldwide network of sales agencies and distributors, you can obtain genuine PCM spare parts quickly. Using PCM spare parts ensures that PCM products last as long as possible, benefit from warranty protection and maintain their CE conformity until their end of life.

PCM experts are dedicated to spare parts and answer your request in the shortest time. Thus, available standard PCM spare parts can be delivered within 24hrs.

COMMISSIONING

PCM pumps and systems are simple to use and efficient as long as they are installed and commissioned properly.

Through pre-operational checks and close monitoring of all equipment, our installation services implement stable and secure production.

Our installation services take the guesswork out of integrating a new pump into an existing system or installing a new pump from scratch. We provide start-up assistance, system integration engineering and training for operators.

PCM

Ref B-000326 - Index E - Sept. 2017 - Non contractual pictures