TUpH 396, 396VP, 396P, 396PVP, 396R, 396RVP

Retraction/Submersion/Insertion pH/ORP Sensors

- Smart enabled
- SILCORE™ technology provides increased sensor life when used in elevated temperature applications.
- Quick cable-to-sensor release, provided by the watertight VP8 connector, eliminates cable twisting.
- Minimum sensor maintenance due to TUpH reference technology which ensures steady pH signal when sensor is coated.
- Maximum sensor life due to helical reference pathway which hinders reference poisoning.
- Field proven ACCUGLASS™ pH glass formulations minimize glass cracking, resulting in enhanced performance and increased life.
- Provides advanced sensor diagnostics for pH and reference signals when used with Rosemount Analytical's advanced analyzers.
- Maximum Pressure Specifications of 150 psig (1135 kPa [abs]) at 100 ° C (212 ° F)

Features and Applications

TUpH pH/ORP-sensors are now offered with SMART capabilities. SMART option becomes enabled when used with the 1056, 1057 1066, and 56 Analyzers. The pH-loop capabilities include auto-recognition of the SMART sensor, automatic upload of calibration data and associated time stamp, historical recording of pH diagnostics (slope, offset, reference impedance, glass impedance). This trending data allows technicians to predict frequency of maintenance and estimate sensor life for a particular process condition. Additional SMART features include factory calibration, resetting SMART sensor calibration data with user menus, and manufacturing information.

396 and 396VP

A large self cleaning optional flat or standard hemi glass bulb electrode in a stainless steel body, completely sealed by EPDM to eliminate process intrusion.

396P and 396PVP

A RUGGED THREADED POLYPROPYLENE BODY for maximum chemical resistance and completely sealed to eliminate process intrusion. EPDM to eliminate process intrusion.

396R and 396RVP

A Titanium retractable body for insertion depths up to 27 inches and easy sensor removal under pressure without process shutdown (ball valve kit shown can be purchased separately).

The TUpH™ large area reference junction for minimum maintenance requirements: The reference junction provides an electrical connection between the reference electrode and the sample, and helps maintain a stable reference potential, regardless of the change in sample pH. The TUpH reference electrode junction, the entire plastic tip surrounding the glass pH electrode, maintains a steady reference signal even in the dirtiest of applications because it resists plugging (a common cause of pH signal drift). This large reference junction area is made of micron sized reference pathways used for ionic exchange so it resists plugging by large particles and will continue to send a steady pH signal, even in the dirtiest of applications. The TUpH reference junction technology has been field-proven for minimum maintenance requirements.

The TUpH helical reference pathway stops reference poisoning. Ions diffuse through the reference pathways and a charge is passed to the reference element. The reference element must be protected from contamination by poisoning ions such as sulfide, mercury, cyanide, and ammonia or else the pH signal will drift. The TupH sensor's long internal helical reference pathway hinders and slows down the rate of contaminants migrating to the reference element therefore providing for a longer sensor life.

The entire line of TUpH model sensors now incorporate the new SILCORE™ technology contaminant barrier. This triple-seal barrier prevents moisture and material impurities from migrating to the pH sensor's reference electrode's metal lead wire. By preventing these contaminants from compromising the integrity of the pH measurement, sensor life is increased, especially at higher temperatures where increased migrations occur. In addition, the SILCORE technology provides added protection against sensor failure due to vibrations and shock by transferring damaging energy away from the glass-to-metal seal.

The AccuGLASS pH glass formulations exceed industry standards. The AccuGlass pH glass is a result of many years of glass research resulting in a formulation which has been found to increase the life of the sensor. Unlike other pH glasses presently on the market, this glass resists cracking especially at higher temperatures and reduces sodium ion error commonly found in high pH applications. Overall, the AccuGlass formulation enhances the sensor performance to measure pH more accurately and have a longer sensor life than ever before.

A choice of flat or hemi glass pH glass electrodes is available to best meet various application needs. Flat glass is advantageous in abrasive or coating applications that etch or build up on glass, respectively. In coating applications, such as slurries, the flat surface allows the process flow to act as a scrubbing agent to reduce coating and maintenance. In abrasive applications pitting from silicates and other similar materials is minimized by the flat glass surface to provide longer sensor life. Flat glass sensors are offered with a flat tip which is flush with the flat glass. The hemi bulb glass is ideal for general purpose use and for those processes requiring greater accuracy over the entire pH range. All hemi bulb sensors are offered with a standard shrouded tip which completely surrounds the glass

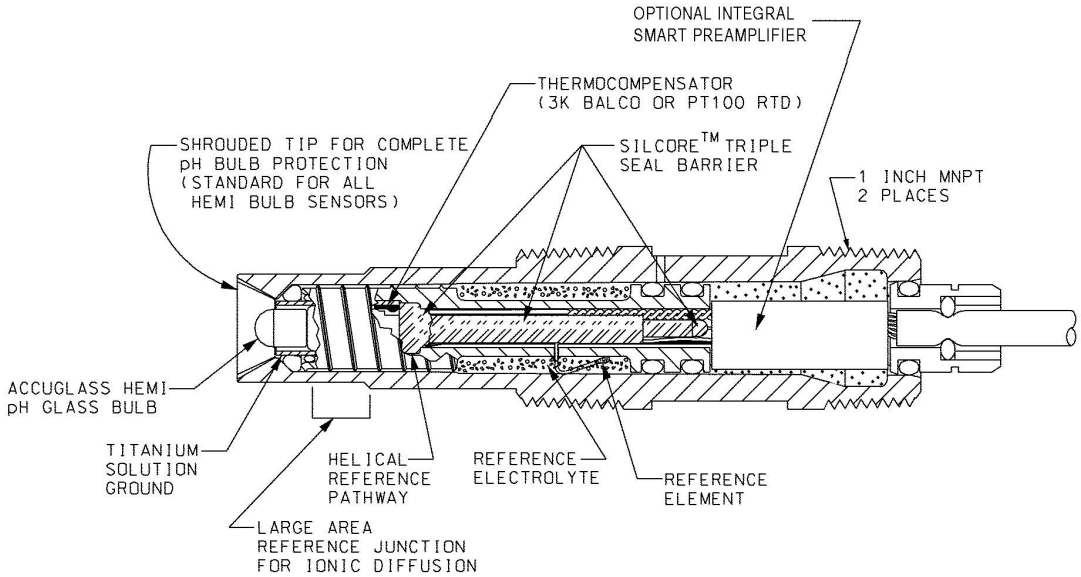

Cross Section Diagram of the TUpH Reference Technology. All TUpH sensors are designed with a large area reference junction, helical reference pathway, and an AccuGlass pH glass bulb. This sensor technology ensures superior performance while only requiring minimal maintenance.

bulb for protection against solids. An optional slotted tip is also available and allows the process to flow by the glass electrode for accurate and reliable pH measurement. Both pH glass bulbs — the standard hemi or optional flat pH glass — are exceptional for increased resistance to high temperature and other effects of aging for longer life.

The TUpH reference junction and helical pathway combined with the AccuGLASS pH glass performs exceptionally well in dirty, high solid applications and requires only minimum maintenance. This is the toughest pH sensor on the market and is still unmatched by all other pH sensors. The constant increase in demand for the TUpH sensor proves it's success as the best process industry pH sensor.

All TUpH sensor models have been specifically designed for improved life in harsh, dirty, and abrasive applications such as lime slurry, waste treatment, paper machine headbox, and pigment/dye applications, where large quantities of suspended solids are present. Various sensor materials, depending on the sensor model, are available for a variety of different application needs.

SMART is the standard option. A preamplifier converts the high impedance pH signal into a stable, noise-free signal and must be used with all pH sensors. An integral SMART preamplifier stores calibration information and can be built into the sensor when ordering the SMART preamplifier option. Otherwise, a standard preamplifier can be used in a junction box or built into the analyzer/transmitter. All integral preamplified SMART TupH Sensors are compatible with all Rosemount Analytical instruments.

The 396VP, 396PVP, and 396RVP are offered with a watertight VP sensor-to-cable connector which eliminates rewiring and cable twisting when replacing sensors. The VP (Variopol) multiple pin connector is an integral part of each sensor model and uses a mating VP cable. Once the cable is installed and wired to the analyzer, sensors are easily replaced without replacing the cable, without rewiring the analyzer (if the replacement sensor is the same as its predecessor). Also the sensor can be disconnected from the cable before removal from the process which eliminates cable twisting. VP8 cable assemblies work with all VP sensors. VP8 wiring is standard across all pH sensor families. VP8 is required when used with SMART preamplified sensors.

The Model 396P and 396PVP sensors are available in two configurations: the standard shrouded tip, in which the pH glass is completely recessed within the reference junction for abrasive or rough applications, and the optional slotted tip with a partially exposed pH glass for viscous or low flow applications.

The Model 396P and 396PVP sensors feature a titanium solution ground, constructed in an annular design around the pH/ORP electrode. The solution ground provides advanced sensor diagnostics for preventative maintenance when used with Rosemount Analytical 54e, 56, 1056, 1057, 5081, 1066, and XMT instruments. In addition, the Model 396P sensor can be used with most non-diagnostic Rosemount Analytical and other manufacturers' instruments.

The 396P and 396PVP sensor is housed in a molded polypropylene body with EPDM seals, making it virtually indestructible and chemically resistant. Complete encapsulation eliminates leakage or high humidity problems traditionally found in other pH/ORP designs. The simplified construction, designed with user convenience in mind, does not require electrolyte (KCl) replenishment or any high maintenance troubleshooting procedures.

The 396 and 396VP TUpH Sensors are housed in a stainless steel body with optional 1" threaded connector suitable for insertion, submersion or flow through installation. The sensor includes a general purpose glass pH electrode in the standard bulb or optional flat glass configuration. The TUpH reference has a large area polypropylene junction with a gel filled reference electrolyte. The 396 and 396VP TUpH are available with an optional SMART integral preamplifier when choosing the 396VP-55 option. Automatic temperature compensation is standard 3K Balco or Pt 100 RTD.

Percent Linearity

pH Range	396 / 396VP		396P / 396PVP		396R / 396RVP	
	GPHT Hemi	GPHT Flat	GPHT Hemi	GPHT Flat	GPHT Hemi	GPHT Flat
0–2 pH	94 %	95 %	94 %	–	94 %	93 %
2–12 pH	99 %	99 %	97 %	98 %	97 %	98 %
12–13 pH	97 %	96 %	98 %	95 %	98 %	95 %
13–14 pH	92 %	–	98 %	–	98 %	–

The 396R and 396RVP Sensors are designed for use with a 1-1/4 in. or 1-1/2 in. ball valve for hot tap installation. The 396R and 396RVP are constructed of molded polypropylene housed in a titanium tube with EPDM seals to provide maximum chemical resistance. The sensors feature a titanium solution ground used for advanced sensor diagnostics when used with Rosemount Analytical 54e, 56, 1056, 1057, 5081, 1066, and XMT instruments. These advanced sensor diagnostics provide preventative maintenance by notifying the operator of the need for replacement and cleaning of an aged or fouled sensor, thus allowing continuous optimum performance.

The Rosemount Analytical 54e, 56, 1056, 1057, 1066, 5081, and XMT instruments offer advanced sensor diagnostics to provide preventative maintenance by notifying the operator of the need for replacement and cleaning of an aged or fouled sensor, thus allowing continuous optimum performance. The 396R and 396RVP sensors also feature a slotted tip for protection from breakage while allowing the process to flow by the glass electrode for accurate and reliable pH measurement.

Specifications	396/396VP	396P/396PVP	396R/396RVP
Measurements and Ranges	pH: 0-14	pH: 0-14pH: 0-14 ORP: -1500 to 1500 mv	pH: 0-14pH: 0-14 ORP: -1500 to 1500 mv
Available pH ACCUGLASS Types	GPHT hemi bulb or GPHT flat bulb	GPLR hemi bulb or GPLR flat bulb	GPLR hemi bulb or GPLR flat bulb
Wetted Materials	316 SST, Polypropylene, EPDM, glass	Titanium, Polypropylene, EPDM, glass: platinum (ORP only)	Titanium, Polypropylene, EPDM, glass: platinum (ORP only)
Process Connection	None, use 1 in. NPT process connector, PN 23166-00 or 23166-01 (sold separately)	1 in. MNPT front and rear facing threads	None, use 1-in. process connector or ball valve kit (1-1/2 or 1-1/4 in.) (sold separately)
Temperature Range	0-100 °C (32-212 °F)		
Pressure Range-Hemi bulb	100-1135 kPa (abs) (0-150 psig)		
Pressure Range-Flat bulb	100-790 kPa (0-100 psig)		
Maximum Pressure at Retraction or Insertion	Not Applicable	Not Applicable	Code 21: 542 kPa (abs) (64 psig) Code 25: 343 kPa (abs) (35 psig)
Minimum Conductivity	100 µS/cm		
Integral Cable	15 ft coaxial with BNC	Code 01: 25 ft 11 conductor Code 02: 15 ft coaxia	Standard 15 ft coaxial Code 60: 9.5 in. coaxial w/BNC Code 61: 9.5 in. coaxial
Preamplifier Options	Remote or Integral SMART		
Weight/Shipping Weight	0.45 kg/0.9 kg (1 lb/2 lb)	0.45 kg/0.9 kg (1 lb/2 lb)	Sensor: Code 21: 0.9 kg/1.40 kg (2.0 lb/3.0 lb)
			Code 25: 1.40 kg/1.80 kg (3.0 lb/4.0 lb)
			Ball Valve PN 23240-00: 2.25 kg/3.20 kg (5.0 lb/7.0 lb)
			Junction box; 1.40 kg/1.80 kg (3 lb/4 lb)
VP Cable	Use cable PN 24281-XX (where XX = -01 thru -08 and designates various cable lengths)		

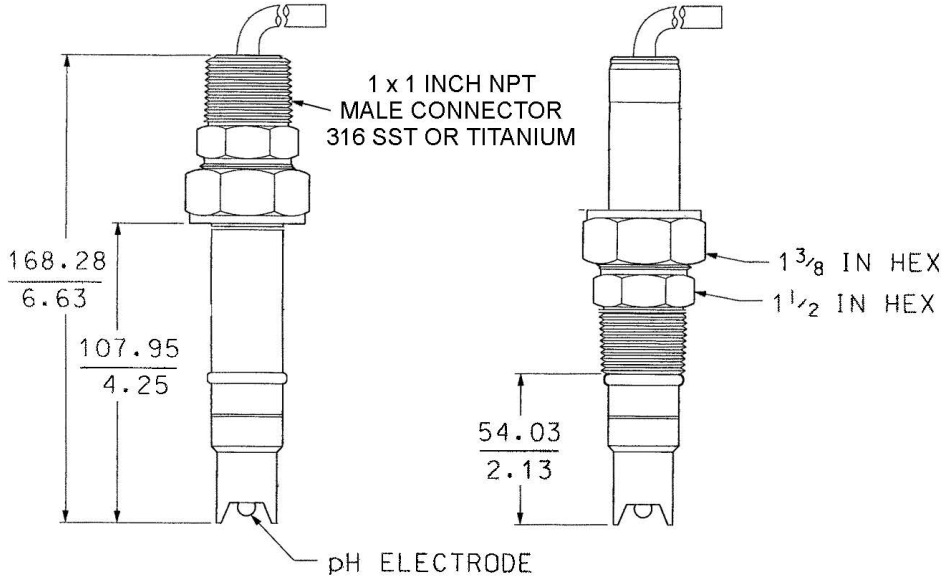

396 with Optional Connector and 396VP Dimensions

Metal Process Connector PN 23166-xx (xx = 00 for 316 SST and xx = 01 for titanium) can be used for insertion or submersion Model 396 sensor connection to 1-inch tee fittings. It also must be used to connect Model 396R to ball valve PN 23240-00 or directly to the process.

The metal process connector gives the sensor various insertions depths, depending on where the user locates the compression fitting. Also the threads can be switched to face the cable end of the sensor for connection to submersion pipes.

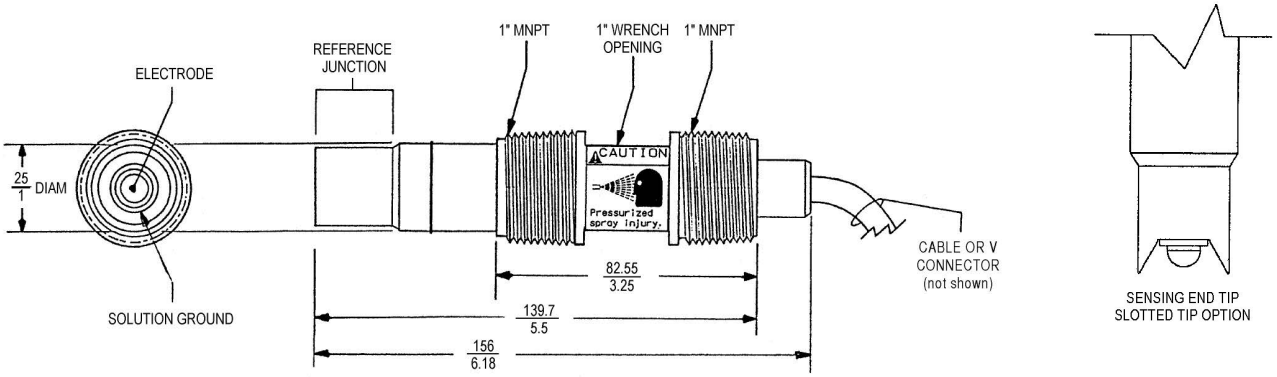

396P and 396PVP Dimensions

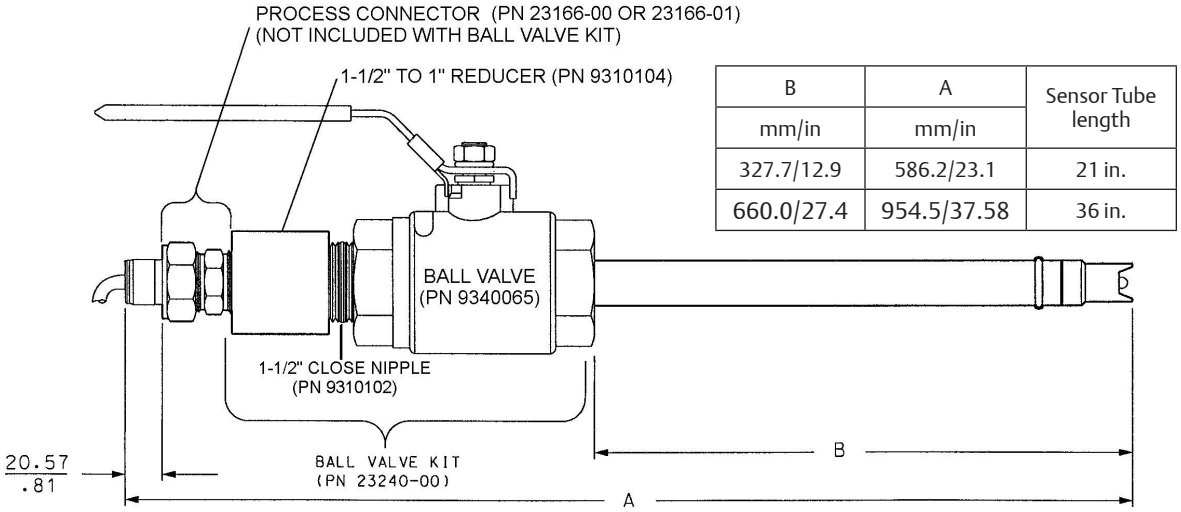

B	A	Sensor Tube length
mm/in	mm/in	
327.7/12.9	586.2/23.1	21 in.
660.0/27.4	954.5/37.58	36 in.

1¼ in. FNPT Ball Valve Kit (PN 23240-00) shown with process connector (sold separately) and TUpH Model 396R pH sensor. Ball valve kit includes a 1½ in. full port ball valve, a 1½ in. FTP to 1 in. FTP reducer (which serves as the retraction chamber) and a 1½ in. close nipple that connects the reducer to the ball valve. A connector (PN 23166-00 or 23166-01) is required to connect sensor to the reducer.

Ball valve kit PN 23240-00 with other accessories (sold separately).

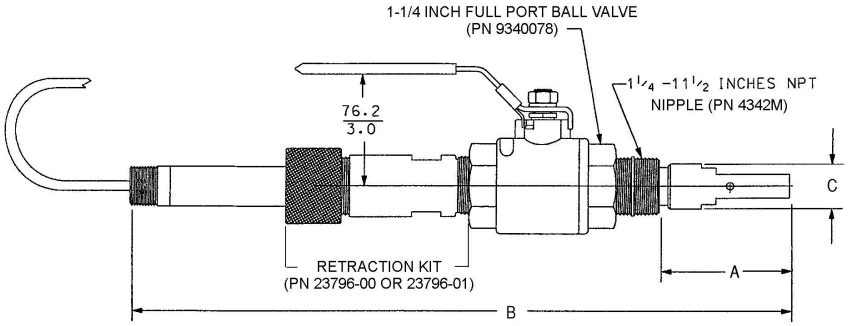

1¼ in. MNPT Ball Valve Kit (PN 23765-00 or 23765-01) shown with retraction kit and Endurance Model 402 conductivity sensor. Ball valve kit includes a 1¼ in. full port ball valve, a 1¼ in. nipple, and a retraction chamber.

The ball valve kit (PN 23765-00 or -01) has all parts needed to install the sensor.
The retraction chamber (PN 23796-00) can be purchased separately.

Mounting and Accessories

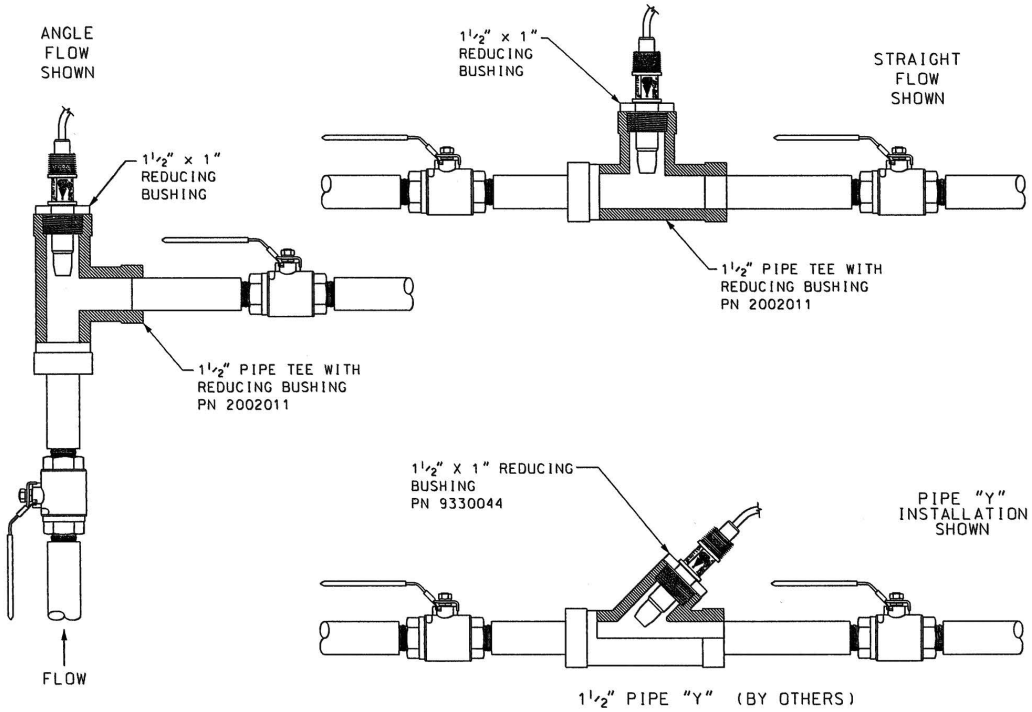

Typical Flow Through Installation (sensor must be installed at least 10 ° above the horizon)

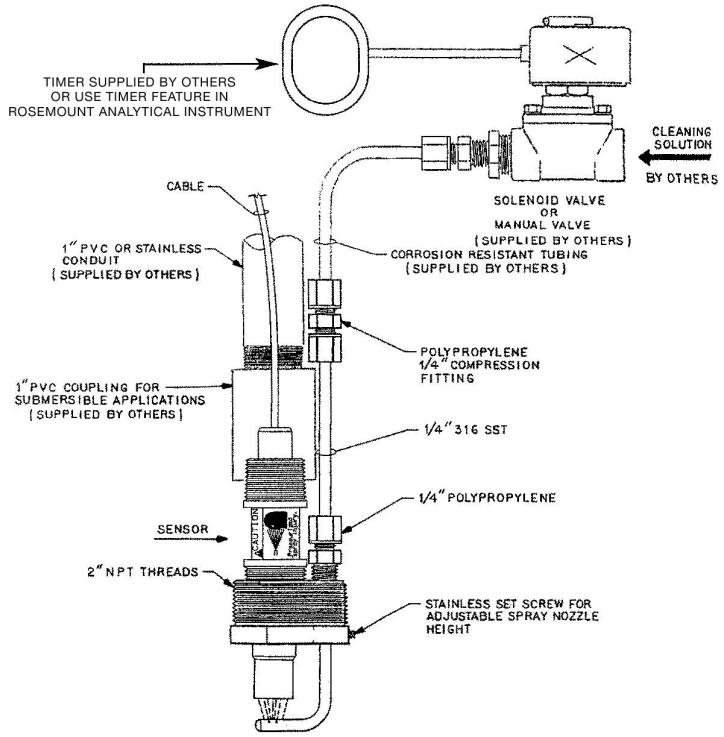

396P and 396PVPpH sensor with Spray Cleaner (PN 12707-00)

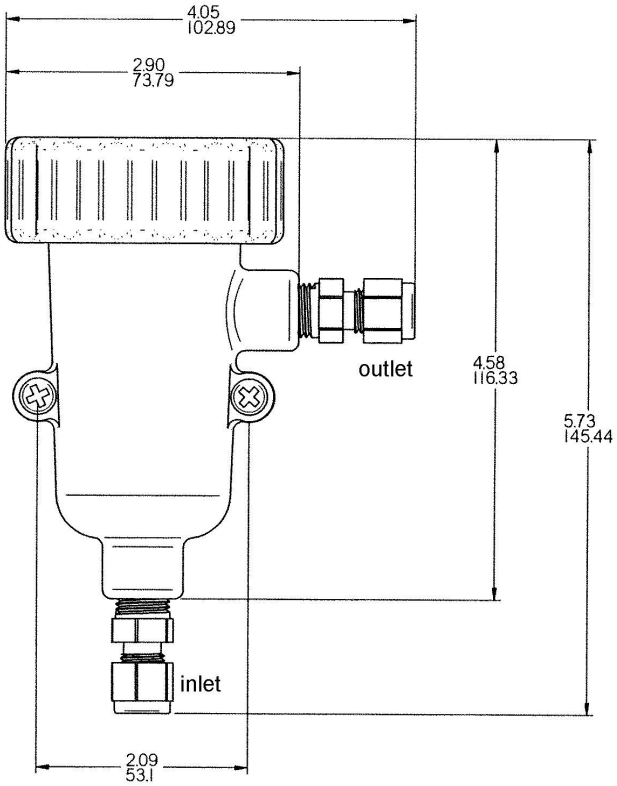

Low Flow Cell (PN 24091-00) for 396 and 396P-41 sensor. Maximum pressure: 65 psig (549 kPa abs). Maximum temperature: 122 °F (50 °C)

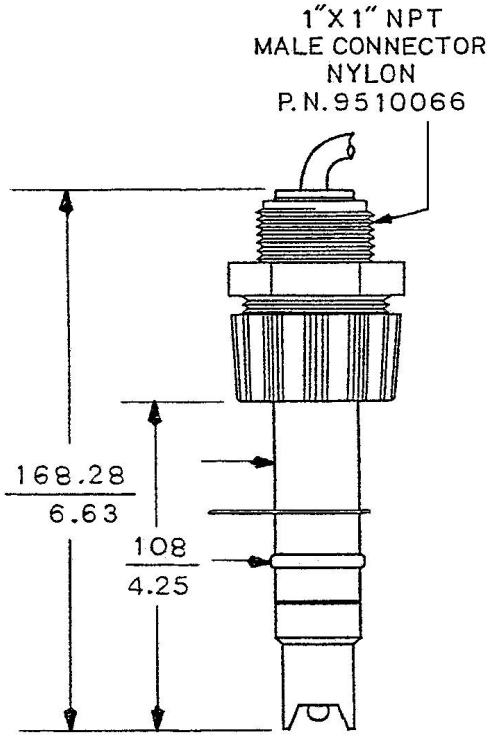

Submersion Accessory (PN 9510066) for 396 396VP

Ordering Information 396 / 396VP

The 396 TUpH Sensor is housed in a stainless steel body with optional 1" threaded connector suitable for insertion, submersion or flow through installation. The sensor includes a general purpose glass pH electrode in the standard bulb or optional flat glass configuration.

The TUpH reference has a large area polypropylene junction with a gel filled reference electrolyte. The Model 396 TUpH is available with an optional SMART integral preamplifier when choosing the 396VP-55 option. Automatic temperature compensation is standard 3K Balco or Pt 100 RTD.

396 TUpH Insertion/Submersion Stainless Steel pH Sensor with Integral Cable	
Transmitter/TC Compatibility	
50	For use with Models: 1181pH, 1050, 1003 (3k Balco)
54	For use with Models: 54, 1054, 1055, Series: 81, 2081, 3081, 4081, 5081, XMT, 1056, 1057, 1066, 56 (Pt-100)
Cable Options	
–	No Selection; 396 with 15 ft cable and BNC
62	Cable without BNC
Sensor Enhancement Options	
–	No selection
71	GPHT Flat Bulb

396VP TUpH Insertion/Subersion Stainless Steel pH Sensor with VP8 Connector	
Transmitter/TC Compatibility	
50	For use with Models: 1181pH, 1050, 1003 (3k Balco)
54	For use with Models: 54, 1054, 1055, Series: 81, 2081, 3081, 4081, 5081, XMT, 1056, 1057, 1066, 56 (Pt-100)
55	For use with Models: 1055, 1056, 1057, 1066, 54, 56, 5081, XMT (selectable only with -70 SMART Preamplifier)
Sensor Enhancement Options	
–	
71	GPLR Flat Glass
Preamplifier Options	
–	No Preamplifier
70	SMART Preamplifier (for use with -55 option only)

Process Connectors (required for all first time installations)	
Part Number	
23166-00	Connector, 1" x 1" 316 SS, with O-ring Groove
23166-01	Connector, 1" x 1" Titanium, with O-ring Groove
9510066	Process Connector, Nylon, Submersion, 1" MNPT

Ordering Information 396P / 396PVP

The 396P Sensor is housed in a molded reinforced polypropylene body with 1" MPT threads suitable for insertion, submersion or flow through installation. The sensor includes a general purpose pH electrode or a platinum ORP electrode, a TUpH reference junction and a solution ground. The Model 396P and 396PVP pH/ORP is available with or without an integral hermetically sealed preamplifier. Automatic temperature compensation (Pt- 100 RTD or 3K Balco) is standard. Two cable lengths of 15 ft or 25 ft are offered for the 396P sensor; the 396PVP sensor is offered with the robust VP8 connector and requires a mating VP8 cable.

396P TUpH Insertion/Submersion pH/ORP sensor with Integral Cable	
Preamplifier/Cable Options	
01	SMART Preamplifier with 25' Cable
02	Without Integral Preamplifier, 15' Cable
Measuring Electrode	
10	GPLR pH Glass
12	ORP
13	GPLR Flat pH Bulb
Transmitter/TC Compatibility	
50	For use with Model 1181 pH/ORP (3k Balco)
54	For use with Models: 1054, 2054; Series 2081 (Pt-100)
55	For use with Models: 54, 56, 1055, 1056, 1057, 81, 3081, 4081, 5081, 1066, XMT (Pt-100)
Sensor Enhancement Options	
-	No Selection
41	Slotted Tip

396PVP TUpH Insertion/Submersion pH/ORP sensor with Variopol Connector	
Measuring Electrode	
10	GPLR pH Glass
12	ORP
13	GPLR Flat pH Bulb
Transmitter/TC Compatibility	
50	For use with Model 1181 pH/ORP (3k Balco)
54	For use with Models: 1054, 2054; Series 2081 (Pt-100)
55	For use with Models: 54, 56, 1055, 1056, 1057, 81, 3081, 4081, 5081, 1066, XMT (Pt-100)
Sensor Enhancement Options	
-	No Selection
41	Slotted Tip
Preamplifier Options	
–	
70	SMART Preamplifier (available only with -10, -13, and -55 options)

Ordering Information 396R / 396RVP

The 396R sensor is housed in a titanium tube, with a TUpH polypropylene reference junction and titanium solution ground for use with a ball valve (order separately) for hot tap applications. The sensor features a slotted glass/platinum electrode and Pt-100 or 3K Balco temperature compensation. The 396R sensor is available with 15' of integral cable or a VP connector when ordering the 396RVP. Remote or sensor head junction box kits with preamplifiers must be ordered separately if the analyzer/transmitter does not have an integral preamplifier within 15 ft. of the sensor. A SMART preamplifier version is also available when ordering the 396RVP-55.

396R TUpH Insertion/Submersion pH/ORP sensor with Integral Cable	
Measuring Electrode	
10	GPLR pH Glass
12	ORP
13	GPLR Flat pH Bulb
Sensor Length	
21	21" Titanium Tube
25	36" Titanium Tube
Transmitter/TC Compatibility	
50	For use with Model 1181 pH/ORP (3k Balco)
54	For use with Models: 54, 1054, 1055, 1056, 1057, 56, 1066, Series: 81, 2081, 3081, 4081, 5081, XMT, 2700 (Pt-100)
Sensor Enhancement Options	
-	No Selection
60	9.5" Cable with BNC for connection to 1181, 1054 series, and 2081 sensor head junction boxes
61	9.5" Cable without BNC for use with Sensor Head Junction Box 23709-00 (not available with -50 option)

396RVP TUpH Insertion/Submersion pH/ORP sensor with Variopol Cable	
Measuring Electrode	
10	GPLR pH Glass
12	ORP
13	GPLR Flat pH Bulb
Sensor Length	
21	21" Titanium Tube
25	36" Titanium Tube
Transmitter/TC Compatibility	
50	For use with Model 1181 pH/ORP (3k Balco)
54	For use with Models: 1054, 2054; Series 2081 (Pt-100)
55	For use with Models: 54, 56, 1055, 1056, 1057, 81, 3081, 4081, 5081, 1066, XMT (Pt-100)
Preamplifier Options	
–	
70	SMART Preamplifier (available only with -10, -13, and -55 options)

Accessories

Process Connectors (required for all first time installations of 396, 396VP, 396R, and 396RVP)	
23166-00	Connector, 1" x 1" 316 SS, with O-ring Groove
23166-01	Connector, 1" x 1" Titanium, with O-ring Groove
Connector cable, VP8 (required for all first time installations of VP sensors)	
24281-00	15 ft. (4.6m) VP8 cable
24281-01	25 ft. (7.6m) VP8 cable
24281-03	50 ft (15.2m) VP8 Cable
24281-04	100 ft (30.5m) VP8 Cable
24281-06	10 ft (3.0m) VP8 Cable
24281-07	20 ft (6.1m) VP8 Cable
24281-08	30 ft (9.1m) VP8 Cable
Retraction Mounting Assemblies for 396R and 396RVP	
23240-00	1 ½ inch Ball Valve Assembly, 316 Stainless Steel; 1 ½ inch full port ball valve, 1 ½ x 1 ½ inch nipple, and retraction chamber. Process connector 23166-00/-01 required; sold separately
23765-00	1 ¼ inch Ball Valve Assembly, 316 Stainless Steel; 1 ¼ inch full port ball valve, 1 ¼ to 1 ½ inch nipple, and custom retraction kit with graphite packing gland for smooth sensor insertion/removal
Remote Junction Boxes and Mounting Brackets; for use when standard cable lengths need to be extended	
23555-00	Junction Box; contains preamplifier for 54e, 56, 1055, 1056, 1057, 1066, 3081, 4081, 5081, XMT
23550-00	Junction Box with board for point-to-point cable extension; use with sensors containing integral preamplifiers
23709-00	Sensor Head Junction Box for 396R and 396RVP; contains preamplifier for 54, 56, 1055, 1056, 1057, 1066, 3081, 4081, 5081, XMT
2002565	Mounting Bracket Kit with mounting plate and U-bolts; use with PN 23555-00 or 23550-00 junction boxes
Extension Cables (required when using a remote junction box)	
23646-01	Extension Cable, 11-conduit with shields, wires prepared for easy installation, per foot (or meter); best choice for easiest installation
9200273	Extension Cable, 11-conduit with shield, raw cable (user must cut and prepare cable ends), per foot (or meter)
Calibration Accessories	
9210012	Buffer Solution, pH 4.01, 16 oz (473 ml)
9210013	Buffer Solution, pH 6.86, 16 oz (473 ml)
9210014	Buffer Solution, pH 9.18, 16 oz (473 ml)
R508-8OZ	ORP Standard, 475 mV, 8oz (236 ml)
Mounting Assemblies	
11275-01	Handrail Mounting Assembly; includes a 6 ft straight pipe, pipe coupling, 6 ft long sweep pipe, unistrut, pipe clamps, and mounting channels
2002011	CPVC flow through Tee, 1–½" NPT process connections
24091-00	Low Flow Cell with ¼ inch inlet and outlet
915240-03	Tee, Flow-through, 2" PVC tee with ¾" NPT process connections and mounting adapter to eliminate cable twisting
915240-04	Tee, Flow-through, 2" PVC tee with 1" NPT process conections and mounting adapter to eliminate cable twist
915240-05	Tee, Flow-through, 2" PVC tee with 1 ½"NPT process connections and mounting adapter to eliminate cable twisting
12707-00	Jet Spray Cleaner; for use with water or air cleaning using interval timer from instrument

Hazardous Location Approvals

Please see online certificates for further details.

Sensors without preamp (pH and ORP) – Ex ia IIC T4 Ga (-20 °C ≤ Ta ≤ +60 °C)

Sensors with SMART preamp (pH only) – Ex ia IIC T4 Ga (-20 °C ≤ Ta ≤ +60 °C)
Sensors with standard preamp (396P only) – Ex ia IIC T4 Ga (-20 °C ≤ Ta ≤ +80 °C) or Ex ia IIC T5 Ga (-20 °C ≤ Ta ≤ +40 °C)

Per standards IEC60079-0 : 2011, IEC 60079-11 : 2011

Sensors without preamp (pH and ORP) – II 1 G Ex ia IIC T4 Ga (-20˚C ≤ Ta ≤ +60˚C)

Sensors with SMART preamp (pH only) – II 1 G Ex ia IIC T4 Ga (-20˚C ≤ Ta ≤ +60˚C)

Sensors with standard preamp (396P only) – II 1 G Ex ia IIC T4 Ga (-20˚C ≤ Ta ≤ +80˚C) or II 1 G Ex ia IIC T5 Ga (-20˚C ≤ Ta ≤ +40˚C)

Per standards EN 60079-0: 2012+A11:2013, EN 60079-11:2012

See online CSA Certificate of Compliance for applicable sensor options:

Sensors with preamp – Intrinsically Safe:
Class I, Division 1, Groups ABCD; Class II, Division 1, Groups EFG; Class III; Class I, Division 2, Groups ABCD; Ambient temperature rating -20˚C to +60˚C; Ex ia IIC; T6

Sensors without preamp – Intrinsically Safe and Non-Incendive:
Class I, Division 1, Groups ABCD; Class II, Division 1, Groups EFG; Class III; Class I, Division 2, Groups ABCD; Ex ia IIC; T6; Ambient temperature rating -20˚C to +60˚C: (Simple Apparatus)

Per standards C22.2 No. 142 – M1987, C22.2 No 157 – M1992, CAN/CSA E60079-0:07, CAN/CSA E60079-11:02, UL 50, UL 508, UL 913, UL 60079-0: 2005, UL 60079-11: 2002

See online FM Certificate of Compliance for applicable sensor options:

Intrinsically Safe for use in Class I, II, and III, Division 1, Groups A, B, C, D, E, F, and G; Temperature Class T6 Ta = -20˚C to +60˚C
Intrinsically Safe for use in Class I, Zone 0, AEx ia IIC T6 Ta = -20˚C to +60˚C

Nonincendive for use in Class I, Division 2, Groups A, B, C, and D; Temperature Class T6 Ta = -20˚C to +60˚C

Suitable for use in Class II and III, Division 2, Groups E, F, and G; Temperature Class T6 Ta = -20˚C to +60˚C Hazardous (Classified) Locations

IS/I,II,III/1/ABCDEFG/T6 Ta = 60 °C - 1400332; Entity; I/0/AEx ia IIC/T6 Ta = 60 °C - 1400332; Entity; NI/I/2/ABCD/T6 Ta = 60 °C; S/II,III/2/EFG/T6 Ta = 60 °C

Per standards 3600:1998, 3610:2010, 3611:2044, 3810:2005

EmersonProcess.com/LiquidAnalysis

YouTube.com/user/RosemountAnalytical
Analyticexpert.com
Twitter.com/Rosemount_News
Facebook.com/Rosemount

Emerson Process Management
2400 Barranca Parkway
Irvine, CA 92606
USA
Toll Free + 800 854 8257
T + 949 757 8500
F + 949 474 7250
Liquid.CSC@Emerson.com

ROSEMOUNT™

EMERSON™
Process Management